Vaclon Plus 300 pumps

Models
9191610/1620/1640
9191611/1621/1641
9191612/1622/1642
9191650/1660/1680
9191651/1661/1681
9191652/1662/1682

Manuale di Istruzioni
Bedienungshandbuch
Notice de Mode D'Emploi
User Manual

87-900-103-01 (H)
02/2016

Agilent Technologies

Notices

© Agilent Technologies, Inc. 2016

No part of this manual may be reproduced in any form or by any means (including electronic storage and retrieval or translation into a foreign language) without prior agreement and written consent from Agilent Technologies, Inc. as governed by United States and international copyright laws.

Manual Part Number

Publication Number: 87-900-103-01 (H)

Edition

Edition 02/2016

Printed in ITALY

Agilent Technologies Italia S.p.A.

Vacuum Products Division

Via F.lli Varian, 54

10040 Leini (TO)

ITALY

Warranty

The material contained in this document is provided "as is," and is subject to being changed, without notice, in future editions. Further, to the maximum extent permitted by applicable law, Agilent disclaims all warranties, either express or implied, with regard to this manual and any information contained herein, including but not limited to the implied warranties of merchantability and fitness for a particular purpose. Agilent shall not be liable for errors or for incidental or consequential damages in connection with the furnishing, use, or performance of this document or of any information contained herein. Should Agilent and the user have a separate written agreement with warranty terms covering the material in this document that conflict with these terms, the warranty terms in the separate agreement shall control.

Technology Licenses

The hardware and/or software described in this document are furnished under a license and may be used or copied only in accordance with the terms of such license.

Restricted Rights Legend

If software is for use in the performance of a U.S. Government prime contract or subcontract, Software is delivered and licensed as "Commercial computer software" as defined in DFAR 252.227-7014 (June 1995), or as a "commercial item" as defined in FAR 2.101(a) or as "Restricted computer software" as defined in FAR 52.227-19 (June 1987) or any equivalent agency regulation or contract clause. Use, duplication or disclosure of Software is subject to Agilent Technologies' standard commercial license terms, and non-DOD Departments and Agencies of the U.S. Government will receive no greater than Restricted Rights as defined in FAR 52.227-19(c)(1-2) (June 1987). U.S. Government users will receive no greater than Limited Rights as defined in FAR 52.227-14 (June 1987) or DFAR 252.227-7015 (b)(2) (November 1995), as applicable in any technical data.

Trademarks

Windows and MS Windows are U.S. registered trademarks of Microsoft Corporation.

Safety Notices

CAUTION

A **CAUTION** notice denotes a hazard. It calls attention to an operating procedure, practice, or the like that, if not correctly performed or adhered to, could result in damage to the product or loss of important data. Do not proceed beyond a **CAUTION** notice until the indicated conditions are fully understood and met.

WARNING

A WARNING notice denotes a hazard. It calls attention to an operating procedure, practice, or the like that, if not correctly performed or adhered to, could result in personal injury or death. Do not proceed beyond a WARNING notice until the indicated conditions are fully understood and met.

Vaclon Plus 300

Contents

1 Procedura per l'installazione 9

Informazioni Generali 10

Preparazione per l'installazione 11

Installazione 13

Uso 15

Procedure di uso 16

Manutenzione 18

Smaltimento 19

2 Anleitung zur Installation 21

Allgemeine Hinweise 22

Vor der Installation 23

Installation 25

Gebrauch 27

Bedienungsschritte 28

Wartung 30

Entsorgung 31

3 Procédure pour l'installation 33

Indications Générales 34

Préparation de l'installation 35

Installation 37

Utilisation 39

Procédure d'utilisation 40

Maintenance 42

Mise au rebut 43

4 Installation Procedure 45

General Information 46

Preparation for Installation 47

Installation 49

Use 51

Operating Procedure 52

Maintenance 54

Disposal 55

5 Technical Information 57

Vaclon Plus Pump Replacement Parts and Accessories 58

Description of the Vaclon Pump 59

Technical Specification 61

Vaclon Plus 300 Starcell 63

Vaclon Plus 300 Diode 65

Vaclon Plus 300 Noble Diode 66

Outline Drawing 68

Stray Magnetic Field 69

Vaclon Plus Pump Installation 72

Typical Installation 75

Inlet Flange Connection 76

Control Unit Connection 79

Safety Interlock 80

Heater Installation 80

Heater Replacement 82

Bakeout Operation 82

Operating Procedure 84

Maintenance 85

Exchange of the High Voltage Feedthrough 87

Pump Troubleshooting 90

Vaclon Plus Pump Replacement Parts and Accessories 91

Vaclon Plus Pump Controllers 92

1
Procedura per l'installazione

Informazioni Generali 10
Preparazione per l'installazione 11
Installazione 13
Uso 15
Procedure di uso 16
Manutenzione 18
Smaltimento 19

Traduzione delle istruzioni originali

Agilent Technologies 9/98

Informazioni Generali

Questa apparecchiatura è destinata ad uso professionale. L'utilizzatore deve leggere attentamente il presente manuale di istruzioni ed ogni altra informazione addizionale fornita dalla Agilent prima dell'utilizzo dell'apparecchiatura. La Agilent si ritiene sollevata da eventuali responsabilità dovute all'inosservanza totale o parziale delle istruzioni, ad uso improprio da parte di personale non addestrato, ad interventi non autorizzati o ad uso contrario alle normative nazionali specifiche.

Le pompe della serie VacIon Plus sono pompe ioniche utilizzate comunemente per applicazioni di ultra alto vuoto, grazie alla loro pulizia, capacità di pompare qualsiasi tipo di gas, e del loro funzionamento senza vibrazioni e necessità di manutenzione.

Nei paragrafi seguenti sono riportate tutte le informazioni necessarie a garantire la sicurezza dell'operatore durante l'utilizzo dell'apparecchiatura. Informazioni dettagliate sono fornite nell'appendice "Technical Information".

Questo manuale utilizza le seguenti convenzioni:

AVVERTENZA! **I messaggi di avvertenza attirano l'attenzione dell'operatore su una procedura o una pratica specifica che, se non eseguita in modo corretto, potrebbe provocare gravi lesioni personali.**

ATTENZIONE! I messaggi di attenzione sono visualizzati prima di procedure che, se non osservate, potrebbero causare danni all'apparecchiatura.

NOTA Le note contengono informazioni importanti estrapolate dal testo.

Preparazione per l'installazione

La pompa viene fornita in un imballo protettivo speciale; se si presentano segni di danni, che potrebbero essersi verificati durante il trasporto, contattare l'ufficio vendite locale.

Durante l'operazione di disimballaggio, prestare particolare attenzione a non lasciar cadere la pompa e a non sottoporla ad urti o vibrazioni.

Non disperdere l'imballo nell'ambiente. Il materiale è completamente riciclabile e risponde alla direttiva CEE 85/399 per la tutela dell'ambiente.

ATTENZIONE! Onde evitare problemi di degassamento, non toccare con le mani nude i componenti destinati ad essere esposti al vuoto. Utilizzare sempre i guanti o altra protezione adeguata.

NOTA La pompa non può essere danneggiata rimanendo semplicemente esposta all'atmosfera. Si consiglia comunque di mantenerla chiusa fino al momento dell'installazione sul sistema onde evitare eventuale inquinamento da polvere.

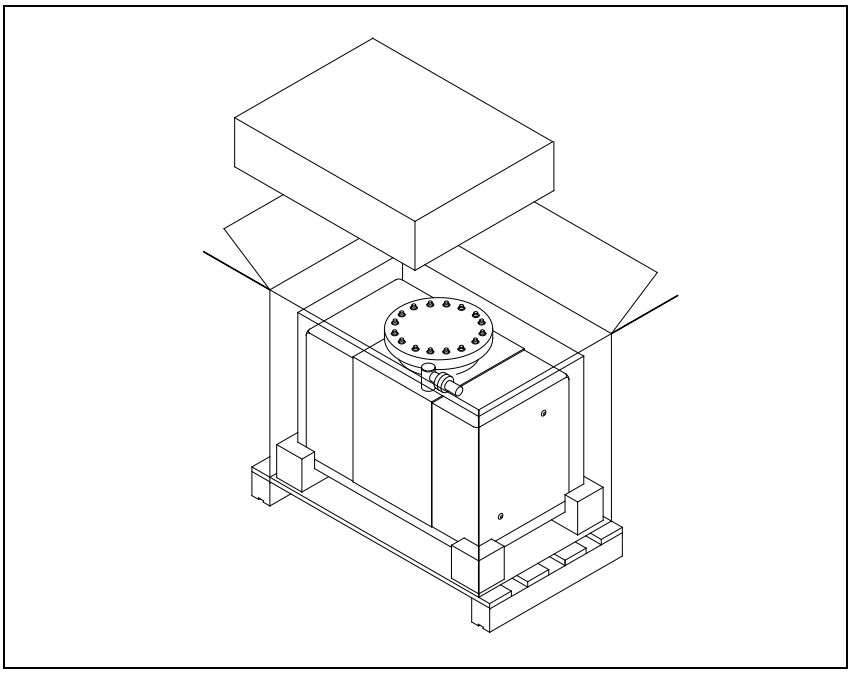

Figura 1

Installazione

AVVERTENZA! **La pompa, a causa del suo peso, deve essere maneggiata tramite appositi attrezzi di sollevamento e spostamento.**

Non installare e/o utilizzare la pompa in ambienti esposti ad agenti atmosferici (pioggia, gelo, neve), polveri, gas aggressivi, in ambienti esplosivi o con elevato rischio di incendio. Durante il funzionamento, per ottenere le specifiche tecniche dichiarate, la temperatura ambiente deve essere compresa tra 0 °C e +85 °C.

ATTENZIONE! La pompa deve essere tenuta sigillata con il suo tubo di ingresso schiacciato finchè non è pronta per essere collegata al sistema.

AVVERTENZA!

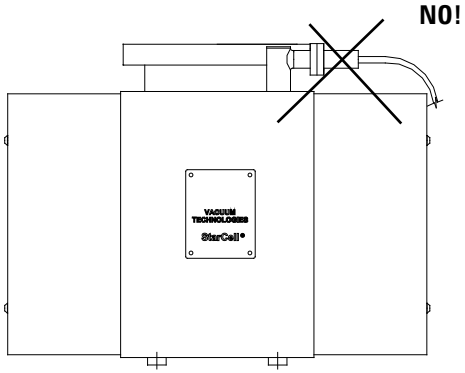

Per evitare lesioni alla persona, non collegare l'alta tensione alla pompa prima che sia installata nel sistema e che tutte le flange di ingresso siano adeguatamente collegate o chiuse.

Il funzionamento delle pompe è ottimizzato solo con l'uso delle apposite unità di controllo Agilent.

ATTENZIONE! Il rispetto delle normative di sicurezza nell'uso delle pompe è garantito solo con l'uso delle unità di controllo Agilent.

La pompa VacIon Plus può essere installata in qualsiasi posizione. Per convenienza normalmente viene montata in posizione verticale con la flangia di ingresso in alto.

Per installazioni con posizione diversa dalla verticale, la pompa deve essere sostenuta tramite i piedini di montaggio posti sul suo fondo.

Per informazioni dettagliate sull'installazione della pompa, vedere l'appendice "Technical Information".

Uso

Tutte le istruzioni per il corretto funzionamento delle pompe VacIon Plus sono contenute nel manuale dell'unità di controllo.

Leggere attentamente tale manuale prima dell'utilizzo.

Si raccomanda di portare la pompa ad una pressione di $1x10^{-4}$ Torr (mbar) in modo da ottenere un avvio più rapido. A questo scopo è meglio non utilizzare una pompa meccanica sigillata con olio, ma se deve essere utilizzata una tale pompa, si raccomanda di inserire una trappola lungo la linea di vuoto per ridurre la pressione causata dai vapori di acqua e di olio provenienti dalla pompa meccanica. Cercare di ridurre al minimo il tempo in cui la pompa meccanica è aperta verso il sistema e verso la pompa ionica, poiché i suoi vapori si diffondono nel sistema a pressioni inferiori a $1x10^{-1}$ Torr (mbar) causando una contaminazione dello stesso. Nei sistemi in cui l'olio deve essere completamente assente, è meglio utilizzare pompe Turbo per la suddetta operazione.

Depositi igroscopici e l'assorbimento dell'idrogeno all'interno del composto di titanio possono provocare l'allungamento del tempo di avvio con l'invecchiamento della pompa. Durante l'esposizione all'aria, il deposito del composto di titanio assorbe vapore acqueo; in conseguenza di ciò, al successivo avvio, il riscaldamento della pompa provoca il rilascio del vapore e di parte dell'idrogeno pompato precedentemente, con l'effetto dell'allungamento del tempo di avvio.

Procedure di uso

Controllare che la polarità dell'unità di controllo sia corretta per la pompa: polarità positiva per le pompe Diode e negativa per le StarCell e le Triode. Fare riferimento al relativo manuale ed osservare la seguente procedura per l'uso della pompa:

1. Tramite una pompa di pre-vuoto portare il sistema da vuoto ad una pressione minima di avvio in accordo alla tabella di pagina 9 ed a seconda del tipo di pompa ionica.
2. Collegare l'unità di controllo ad una apposita fonte di alimentazione ed accenderla.
3. Osservare la tensione, la corrente e la pressione. Se l'avvio è avvenuto ad una pressione di $5x10^{-2}$ Torr (mbar), è tipica una tensione di circa 300 - 400 V. Un valore di corrente prossimo alla corrente di corto circuito dell'unità di controllo è indice dell'esistenza di una perdita nella pompa e nel sistema. Un temporaneo incremento della pressione di pre-vuoto è normale durante la fase di avvio.
4. Lasciare la valvola di pre-vuoto aperta durante l'avvio della pompa ionica finchè non si raggiunge una adeguata pressione di avvio. Se la tensione della pompa ionica scende dopo la chiusura della valvola, riaprirla per un pre-pompaggio aggiuntivo. Appena la pressione diminuisce, la tensione cresce nuovamente e la valvola di pre-vuoto può essere chiusa.
5. Quando la tensione ha raggiunto i 2 – 3 kV, mettere l'unità di controllo nello stato PROTECT. Il sistema sarà così autoprotetto dall'incremento della pressione oltre $1x10^{-4}$ Torr (mbar) quando la pompa non è controllata. Nel caso in cui ci fosse un tale incremento, l'unità di controllo viene spenta automaticamente.
6. La pressione nella pompa può anche essere calcolata leggendo la corrente e convertendo la lettura in pressione tramite l'apposito diagramma pressione-corrente illustrato nell'appendice "Technical Information" di questo manuale.

NOTA I gradini nei diagrammi pressione - corrente sono una caratteristica del modo di funzionamento dei controller Agilent con funzione "step mode". Quando la corrente assorbita dalla pompa raggiunge determinati valori, l'unità di controllo cambia il valore dell'alta tensione in uscita ad un valore più basso.

7 Quando si porta la pompa alla pressione atmosferica, usare azoto secco in modo da evitare l'assorbimento di vapore acqueo da parte delle pareti della pompa.

AVVERTENZA! **Quando la pompa viene utilizzata per il pompaggio di gas tossici, infiammabili o radioattivi, seguire le appropriate procedure tipiche di ciascun gas. Non usare la pompa in presenza di gas esplosivi.**

AVVERTENZA! **Quando è installato il riscaldatore, non toccare la pompa durante le operazioni di riscaldamento e di raffreddamento. L'elevata temperatura può causare lesioni alle persone.**

ATTENZIONE! Non avvicinare dispositivi elettronici alla pompa. Il campo magnetico attorno ad essa può provocare dei malfunzionamenti dei dispositivi stessi.

Manutenzione

Le pompe della serie VacIon Plus non richiedono alcuna manutenzione. Qualsiasi intervento deve essere eseguito da personale autorizzato.

AVVERTENZA! **Prima di effettuare qualsiasi intervento sulla pompa scollegarla dall'alta tensione.**

Qualora una pompa dovesse essere rottamata, procedere alla sua eliminazione nel rispetto delle normative nazionali specifiche.

Smaltimento

Significato del logo "WEEE" presente sulle etichette.

Il simbolo qui sotto riportato applicato in ottemperanza alla direttiva CE denominata "WEEE".

Questo simbolo (**valido solo per i paesi della Comunità Europea**) indica che il prodotto sul quale è applicato, NON deve essere smaltito insieme ai comuni rifiuti domestici o industriali, ma deve essere avviato ad un sistema di raccolta differenziata.

Si invita pertanto l'utente finale a contattare il fornitore del dispositivo, sia esso la casa madre o un rivenditore, per avviare il processo di raccolta e smaltimento, dopo opportuna verifica dei termini e condizioni contrattuali di vendita.

Per maggiori informazioni riferirsi a:

http://www.agilent.com/environment/product/index.shtml

2
Anleitung zur Installation

Allgemeine Hinweise 22
Vor der Installation 23
Installation 25
Gebrauch 27
Bedienungsschritte 28
Wartung 30
Entsorgung 31

Übersetzung der Originalanleitungen

Agilent Technologies 21/98

Allgemeine Hinweise

Dieses Gerät ist für den professionellen Gebrauch bestimmt. Vor dem Gebrauch soll der Benutzer dieses Handbuch sowie alle weiteren von Agilent mitgelieferten Zusatzdokumentationen genau lesen. Bei vollständiger bzw. teilweiser Nichtbeachtung der enthaltenen Hinweise, unsachgemäßem Gebrauch durch ungeschultes Personal, nicht autorisierten Eingriffen und Mißachtung der nationalen Bestimmungen übernimmt Firma Agilent keinerlei Haftung.

Die Pumpen der Serie VacIon Plus sind Ionenpumpen, die aufgrund ihrer Reinheit, ihrer Fähigkeit, alle Arten von Gas zu pumpen, und ihres vibrations- und wartungsfreien Betriebes, allgemein für Ultrahochvakuumanwendungen zum Einsatz kommen.

In den folgenden Abschnitten sind alle erforderlichen Informationen für die Sicherheit des Bedieners bei der Anwendung des Geräts aufgeführt. Detaillierte technische Informationen sind im Anhang "Technical Information" enthalten.

In dieser Gebrauchsanleitung werden Sicherheitshinweise folgendermaßen hervorgehoben:

WARNUNG!

Die Warnhinweise lenken die Aufmerksamkeit des Bedieners auf eine spezielle Prozedur oder Praktik, die bei unkorrekter Ausführung schwere Verletzungen hervorrufen könnte.

VORSICHT!

Die Vorsichtshinweise vor bestimmten Prozeduren machen den Bediener darauf aufmerksam, daß bei Nichteinhaltung Schäden am Gerät entstehen können.

HINWEIS

Die Hinweise enthalten wichtige Informationen, die aus dem Text hervorgehoben werden.

Vor der Installation

Die Pumpe wird in einer speziellen Schutzverpackung geliefert. Eventuelle Transportschäden sind der zuständigen örtlichen Verkaufsstelle zu melden. Beim Auspacken vorsichtig vorgehen, damit die Pumpe nicht fällt oder Stößen oder Vibrationen ausgesetzt wird. Das Verpackungsmaterial ist ordnungsgemäß zu entsorgen. Es ist vollständig recyclebar und entspricht der EG-Richtlinie 85/399 für den Umweltschutz.

VORSICHT! Um Entgasungsprobleme zu vermeiden, dürfen die Komponenten, die mit dem Vakuum in Kontakt kommen, nicht mit bloßen Händen berührt werden. Stets Handschuhe oder einen anderen geeigneten Schutz tragen.

HINWEIS Die Pumpe kann, wenn sie einfach der Atmosphäre ausgesetzt ist, nicht beschädigt werden. Sie sollte jedoch bis zur Installation an der Anlage geschlossen bleiben, um Verunreinigungen durch Staub zu vermeiden.

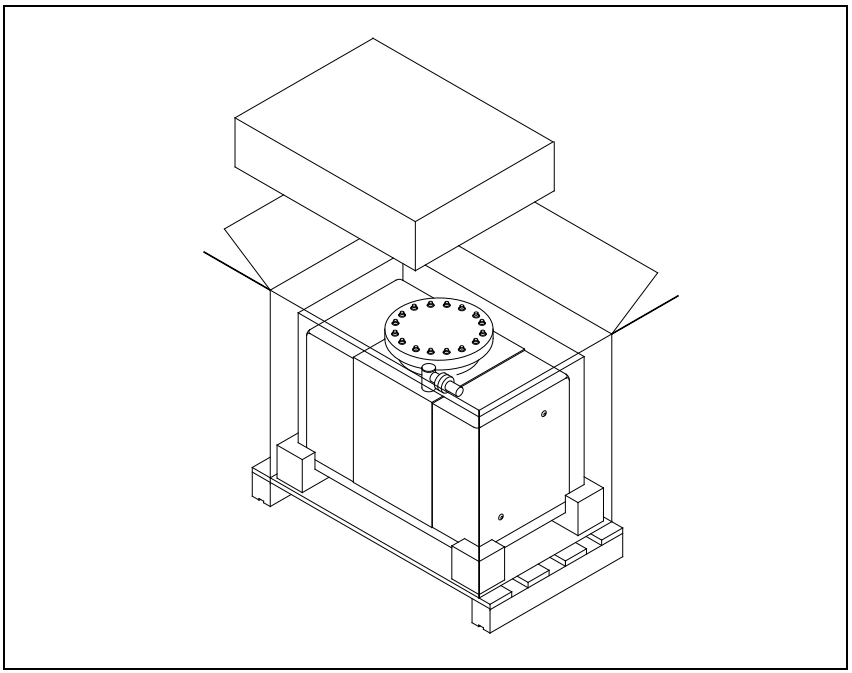

Abbildung 1

Installation

WARNUNG! **Die Pumpe kann aufgrund ihres Gewichtes mittels geeigneter Hebe- und Förderzeuge gehandhabt werden.**

Die Pumpe darf nicht in Umgebungen installiert und/oder benutzt werden, die ungeschützt vor Witterungsbedingungen (Regen, Frost, Schnee), Staub und aggressiven Gasen sind, und in denen Explosions- und erhöhte Brandgefahr besteht.

Während des Betriebes soll die Umgebungstemperatur zwischen 0 °C und +85 °C betragen, um die angegebenen technischen Merkmale zu gewährleisten.

VORSICHT! Die Pumpe soll versiegelt und mit flachgedrücktem Eintrittsschlauch gehalten werden, bis sie für den Anschluß an das System bereit ist.

WARNUNG!

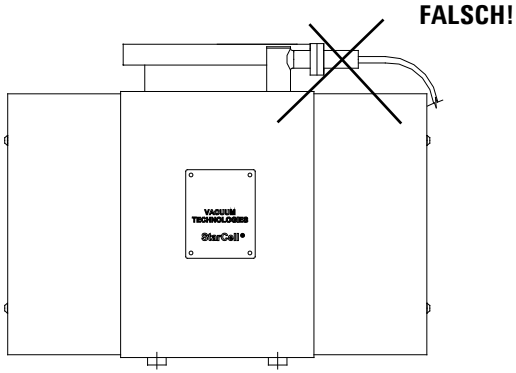

Um Personenschäden zu vermeiden, darf die Hochspannungsleitung der Pumpe erst angeschlossen werden, wenn die Pumpe im System installiert ist und alle Eintrittsflansche entsprechend angeschlossen oder geschlossen sind.

Der Pumpenbetrieb wird nur durch den Einsatz speziell dafür vorgesehener Agilent Steuereinheiten optimiert.

VORSICHT! Die Einhaltung der Sicherheitsvorschriften beim Gebrauch der Pumpen ist nur bei Verwendung von Agilent Steuereinheiten gewährleistet.

Die Pumpe Vaclon Plus kann in einer beliebigen Position installiert werden. Aus praktischen Gründen wird sie in der Regel senkrecht mit nach oben gerichtetem Eintrittsflansch montiert. Bei nicht senkrechten Einbaulagen soll die Pumpe auf Montagefüßen aufliegen, die an ihrer Unterseite angebracht werden.

Detaillierte Informationen zur Installation der Pumpe sind dem Anhang “Technical Information” zu entnehmen.

Gebrauch

Sämtliche Hinweise für den korrekten Betrieb der Pumpen VacIon Plus sind im Handbuch der Steuereinheit enthalten.

Dieses Handbuch ist vor der Inbetriebnahme genau durchzulesen. Es wird empfohlen, die Pumpe auf einen Druck von $1x10^{-4}$ Torr (mbar) zu bringen, um einen rascheren Anlauf zu gewährleisten. Zu diesem Zweck empfiehlt es sich, keine ölversiegelte mechanische Pumpe zu verwenden. Falls hingegen eine derartige Pumpe benutzt werden muß, soll an der Vakuumleitung eine Falle eingesetzt werden, um den durch die Wasser- und Öldämpfe aus der mechanischen Pumpe erzeugten Druck zu verringern. Es ist zu versuchen, die Zeit auf ein Mindestmaß zu reduzieren, während der die mechanische Pumpe zum System und zur Ionenpumpe geöffnet ist, da sich ihre Dämpfe bei Drücken unter $1x10^{-1}$ Torr (mbar) im System verbreiten und dessen Verunreinigung verursachen. Bei Systemen, die vollkommen ölfrei sein müssen, erweisen sich für den obengenannten Vorgang Turbopumpen als geeigneter. Hygroskopische Ablage-rungen und die Absorption von Wasserstoff in der Titanverbindung können die Anlaufzeit verlängern und eine kürzere Standzeit der Pumpe verursachen. Die Ablagerungen der Titanverbindungen absorbieren Wasserdampf, wenn sie der Luft ausgesetzt werden. Dadurch bewirkt beim anschließenden Anlaufvorgang die Aufheizung der Pumpe die Abgabe des Dampfes und eines Teils des zuvor gepumpten Wasserstoffs, so daß sich die Anlaufzeit verlängert.

Bedienungsschritte

Es ist zu kontrollieren, daß die Steuereinheit in bezug auf die Pumpe richtig gepolt ist: positive Polarität für Dioden Pumpen und negative für StarCell oder Triode Pumpen. Es ist nach dem diesbezüglichen Handbuch vorzugehen, für den Gebrauch der Pumpe sind die folgenden Bedienungsschritte zu beachten:

1. Mit einer Vorvakuumpumpe das System auf einen Mindestanlaufdruck gemäß Tabelle 9 in Abhängigkeit vom Ionenpumpentyp bringen.
2. Die Steuereinheit an eine entsprechende Versorgungsquelle anschließen und einschalten.
3. Die Spannung, die Stromstärke und den Druck beobachten. Wenn der Anlauf bei einem Druck von $5x10^{-2}$ Torr (mbar) erfolgt ist, ist eine Spannung von ca. 300 – 400 V typisch. Ein Stromwert, der sich dem Kurzschlußstromwert der Steuereinheit annähert, weist auf eine Leckstelle an der Pumpe und am System hin. Ein zeitweiliger Anstieg des Vorvakuumdruckes ist während der Anlaufphase normal.
4. Während des Anlaufes der Ionenpumpe soll das Vorvakuumventil geöffnet bleiben, bis ein angemessener Anlaufdruck erreicht ist. Wenn die Spannung der Ionenpumpe nach Schließung des Ventils abfällt, ist das Ventil für eine zusätzliche Vorvakuumpumpung zu öffnen. Sobald der Druck sinkt, steigt die Spannung erneut an und kann das Vorvakuumventil geschlossen werden.
5. Wenn die Spannung 2 – 3 kV erreicht hat, ist die Steuereinheit auf den Status PROTECT zu schalten. Das System verfügt auf diese Weise über einen Selbstschutz vor einem Druckanstieg über $1x10^{-4}$ Torr (mbar), wenn die Pumpe nicht kontrolliert ist. Falls ein solcher Anstieg stattfindet, wird die Steuereinheit automatisch ausgeschaltet.
6. Der Pumpendruck kann auch berechnet werden, indem die Stromstärke abgelesen wird und der abgelesene Wert mittels des Druck-Stromstärke-Diagramms im Anhang “Technical Information” des vorliegenden Handbuches in einen Druckwert umgerechnet wird.

HINWEIS Die Stufen im Druck-Stromstärke-Diagramm sind charakteristisch für die Funktionsweise des Agilent Controller mit Funktion “Step mode”. Wenn die Stromaufnahme der Pumpe ein bestimmtes Ausmaß erreicht, ändert die Steuereinheit die ausgangsseitige Hochspannung auf einen niedrigeren Wert ab.

7 Wenn die Pumpe auf den atmosphärischen Druck gebracht wird, ist trockener Stickstoff zu verwenden, um die Aufnahme von Wasserdampf durch die Pumpenwände zu verhindern.

WARNUNG!

Wenn die Pumpe zur Förderung von giftigen, leicht entflammbaren oder radioaktiven Gasen benutzt wird, sind die für das jeweilige Gas vorgeschriebenen Vorgänge zu befolgen. Die Pumpe nie bei Vorhandensein von explosivem Gas benutzen.

WARNUNG!

Wenn die Heizung installiert ist, darf die Pumpe während der Aufheizung und Abkühlung nicht berührt werden. Die hohe Temperatur kann zu Personenschäden führen.

VORSICHT! Keine elektronischen Geräte in die Nähe der Pumpe bringen. Das darum befindliche Magnetfeld kann zu Funktionsstörungen der Geräte führen.

Wartung

Die Pumpen der Serie VacIon Plus erfordern keine Wartung. Sämtliche Eingriffe dürfen nur von autorisiertem Personal vorgenommen werden.

WARNUNG! **Vor Eingriffen an der Pumpe ist diese von der Hochspannungsquelle zu trennen.**

Bei eventueller Verschrottung einer Pumpe ist diese entsprechend der einschlägigen nationalen Vorschriften zu entsorgen.

Entsorgung

Bedeutung des "WEEE" Logos auf den Etiketten.

Das folgende Symbol ist in Übereinstimmung mit der EU-Richtlinie WEEE (Waste Electrical and Electronic Equipment) angebracht.

Dieses Symbol (**nur in den EU-Ländern gültig**) zeigt an, dass das betreffende Produkt nicht zusammen mit Haushaltsmüll entsorgt werden darf sondern einem speziellen Sammelsystem zugeführt werden muss.

Der Endabnehmer sollte daher den Lieferanten des Geräts - d.h. die Muttergesellschaft oder den Wiederverkäufer - kontaktieren, um den Entsorgungsprozess zu starten, nachdem er die Verkaufsbedingungen geprüft hat.

Für weitere Informationen:

http://www.agilent.com/environment/product/index.shtml

3
Procédure pour l'installation

Indications Générales 34
Préparation de l'installation 35
Installation 37
Utilisation 39
Procédure d'utilisation 40
Maintenance 42
Mise au rebut 43

Traduction de la mode d'emploi originale

Agilent Technologies 33/98

Indications Générales

Cet appareillage a été conçu en vue d'une utilisation professionnelle. Il est conseillé à l'utilisateur de lire attentivement cette notice d'instructions ainsi que toute autre indication supplémentaire fournie par Agilent avant d'utiliser l'appareil. Agilent décline toute responsabilité en cas de non respect total ou partiel des instructions fournies, d'opérations non autorisées, d'utilisation impropre par du personnel non formé ou contraires aux réglementations nationales spécifiques.

Grâce à leur propreté, à leur capacité de pomper tous les types de gaz, à leur fonctionnement sans vibrations et à l'absence d'entretien, les pompes de la série VacIon Plus sont des pompes ioniques généralement utilisées pour des applications de vide ultra poussé.

Les paragraphes suivants fournissent toutes les indications nécessaires à garantir la sécurité de l'opérateur pendant l'utilisation de l'appareillage. Des renseignements plus détaillés se trouvent dans l'appendice "Technical Information".

Cette notice utilise les signes conventionnels suivants:

AVERTISSEMENT!

Les messages d'avertissement attirent l'attention de l'opérateur sur une procédure ou une manœuvre spéciale dont la mauvaise exécution risque de provoquer de graves lésions.

ATTENTION! Les messages d'attention apparaissent avant certaines procédures dont le non-respect peut endommager sérieusement l'appareillage.

NOTE Les notes contiennent des renseignements importants, extrapolés du texte.

Préparation de l'installation

La pompe est fournie dans un emballage de protection spécial; si l'on constate des signes d'endommagement imputables au transport, contacter aussitôt le revendeur local. Pendant l'opération de déballage, veiller tout particulièrement à ne pas laisser tomber la pompe et à ne lui faire subir aucun choc ni aucune vibration. Ne pas abandonner l'emballage dans la nature. Le matériel est entièrement recyclable et il est conforme à la directive CEE 85/399 en matière de protection de l'environnement.

ATTENTION! En vue d'éviter tout problème de dégazage, ne pas toucher à mains nues les éléments devant être exposés au vide. Mettre toujours des gants ou toute autre protection appropriée.

NOTE La pompe ne peut être endommagée si elle reste simplement exposée à l'atmosphère. Il est quoi qu'il en soit conseillé de ne pas la retirer de son emballage avant le moment de l'installation, afin d'éviter toute pollution due à la poussière.

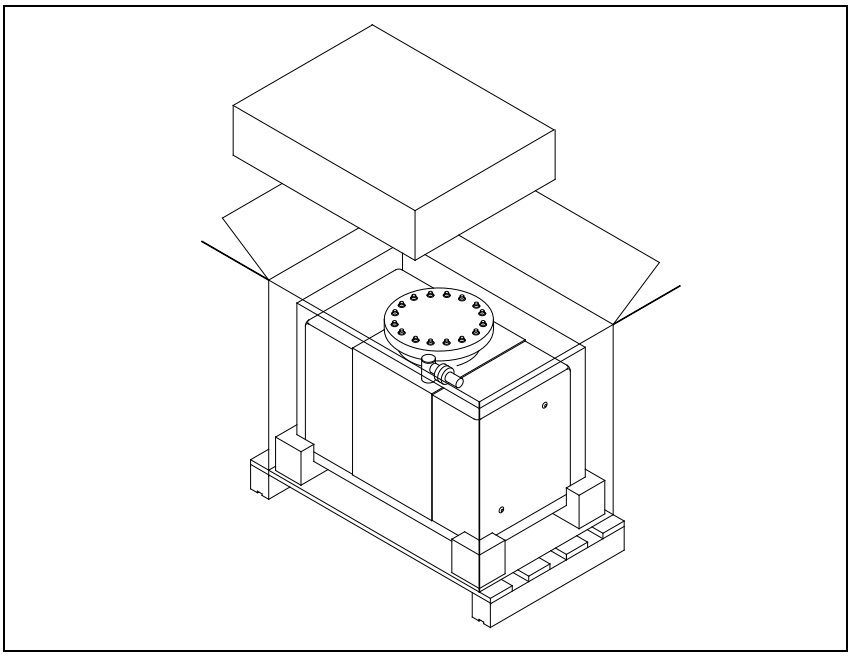

Figure 1

Installation

AVERTISSEMENT!

À cause de son poids, il est indispensable de se servir des équipements de levage et de manutention pour déplacer la pompe.

Ne pas installer et/ou utiliser la pompe dans des milieux exposés à des agents atmosphériques (pluie, gel, neige), à des poussières, à des gaz de combat ainsi que dans des milieux explosifs ou à fort risque d'incendie. Pendant le fonctionnement, pour respecter les spécifications techniques déclarées la température ambiante doit être comprise entre 0 °C et +85 °C;

ATTENTION!

La pompe doit être conservée scellée avec son tuyan d'entrée aplati jusqu'à ce qu'elle soit prête à être branchée au système.

AVERTISSEMENT!

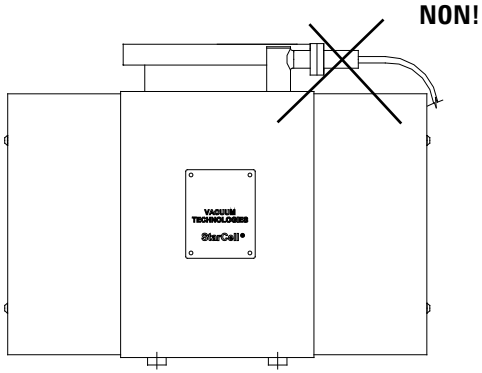

Pour éviter toute lésion aux personnes, ne pas brancher la haute tension à la pompe avant que celle-ci soit installée dans le système et avant que toutes les brides d'entrées soient correctement assemblées ou fermées.

Le fonctionnement de la pompe n'est optimisé que si celle-ci est utilisée avec l'une des unités de contrôle Agilent spécifiques.

ATTENTION! Lors de l'utilisation des pompes, le respect des normes de sécurité est impérativement subordonné à l'emploi des unités de contrôle Agilent.

La pompe VacIon Plus peut être installée dans toutes les positions. Par facilité elle est généralement montée en position verticale avec la bride d'entrée en partie haute. Pour toute installation différente de la position verticale, la pompe doit reposer sur ses pieds de montage placé sur le fond. Pour plus de détails sur l'installation de la pompe, consulter l'appendice “Technical information”.

Utilisation

Toutes les instructions pour le fonctionnement correct de la pompe VacIon Plus sont fournies dans la notice de l'unité de contrôle. Il est conseillé de lire attentivement cette notice avant d'utiliser la pompe. Il est recommandé de porter la pompe à une pression de $1x10^{-4}$ Torrs (mbars) de façon à obtenir un démarrage plus rapide. Pour ce faire il est préférable de ne pas utiliser une pompe mécanique scellée à l'huile mais au cas où il serait nécessaire d'utiliser une telle pompe, il est recommandé d'introduire un dispositif de retenue le long de la ligne de vide afin de réduire la pression due aux vapeurs d'eau et d'huile engendrées par la pompe mécanique. Essayer de réduire au minimum le temps où la pompe mécanique est ouverte vers le système et vers la pompe ionique car ses vapeurs se répandent dans le système à des pressions inférieures à $1x10^{-1}$ Torrs (mbars) causant une contamination de celui-ci. Dans les systèmes où l'huile doit être complètement absente, il est préférable d'effectuer ladite opération à l'aide d'une pompe Turbo. Des dépôts hygroscopiques et l'absorption d'hydrogène dans le composé de titane peuvent provoquer, par effet du vieillissement de la pompe, l'allongement du temps de démarrage. Pendant l'exposition à l'air, le dépôt du composé de titane absorbe de la vapeur d'eau et cette action a pour conséquence qu'au démarrage suivant le chauffage de la pompe entraînera la dispersion de la vapeur et d'une partie de l'hydrogène pompée précédemment ce qui aura pour effet d'allonger le temps de démarrage.

Procédure d'utilisation

Contrôler que la polarité de l'unité de contrôle soit correcte pour la pompe: polarité positive pour les pompes Diode et négative pour les pompes StarCell et Triode. Se reporter au manuel correspondant et observer la procédure suivante pour l'utilisation de la pompe:

1. A l'aide d'une pompe de pré-vide, porter le système à une pression minimale de démarrage en suivant le tableau de la page 9 et en fonction du type de pompe ionique.
2. Brancher l'unité de contrôle à une source d'alimentation appropriée et l'allumer.
3. Contrôler la tension, le courant et la pression. Lorsque la mise en route est effectuée à une pression de $5x10^{-2}$ Torrs (mbars) la tension est généralement d'environ 300 - 400 V. Une valeur de courant proche du courant de court-circuit de l'unité de contrôle révèle l'existence d'une fuite dans la pompe et dans le système. Au cours de la phase de démarrage, un accroissement momentané de la pression de pré-vide est normal.
4. Laisser la soupape de pré-vide ouverte pendant le démarrage de la pompe ionique tant qu'une pression de démarrage appropriée n'a pas été atteinte. Si la tension de la pompe ionique descend après la fermeture de la soupape, la rouvrir pour un pré-pompage supplémentaire. Dès que la pression commence à diminuer, la tension augmente à nouveau et la valve de pré-vide peut être fermée.
5. Lorsque la tension a atteint 2 - 3 kV, mettre l'unité de contrôle en état de PROTECT. Le système sera ainsi protégé contre toute augmentation de pression au-delà de $1x10^{-4}$ Torrs (mbars) lorsque la pompe n'est pas contrôlée. Si une telle augmentation devait être enregistrée, l'unité de contrôle s'éteindrait automatiquement.
6. La pression de la pompe peut également être calculée en relevant le courant et en convertissant la lecture en pression à l'aide du diagramme pression-courant illustré dans l'appendice "Technical Information" de ce manuel.

NOTE Les paliers du diagramme de pression – courant sont une caractéristique du mode de fonctionnement du contrôleur Agilent avec fonction «step mode». Lorsque le courant absorbé par la pompe atteint des valeurs déterminées, l'unité de contrôle porte la valeur de haute tension en sortie à une valeur inférieure.

7 Lorsque l'on porte la pompe à la pression atmosphérique , utiliser de l'azote sec de façon à éviter que les parois de la pompe n'absorbent de la vapeur aqueuse.

AVERTISSEMENT!

Lorsque la pompe est utilisée pour le pompage de gaz toxiques, inflammables ou radioactifs, suivre les procédures appropriées à chaque gaz. Ne pas utiliser la pompe en présence de gaz explosifs.

AVERTISSEMENT!

Lorsque le réchauffeur est installé, éviter de toucher la pompe pendant les opérations de chauffage et de refroidissement. La température élevée peut provoquer des brûlures.

ATTENTION! Ne pas approcher de dispositifs électroniques de la pompe. Le champ magnétique environnant cette dernière peut entraîner des dysfonctionnements desdits dispositifs.

Maintenance

Les pompes de la série VacIon Plus ne demandent aucun entretien. Toute intervention doit être exécutée par un personnel agréé.

AVERTISSEMENT! **Avant toute intervention sur la pompe, la débrancher de la haute tension.**

En cas de mise au rebut d'une pompe, procéder à son élimination dans le respect des normes nationales en vigueur.

Mise au rebut

Signification du logo "WEEE" imprimé sur les étiquettes.
Le symbole ci-dessous est appliqué conformément à la directive CE nommée "WEEE".

Ce symbole (**uniquement valide pour les pays de la Communauté européenne**) indique que le produit sur lequel il est appliqué NE doit PAS être mis au rebut avec les ordures ménagères ou les déchets industriels ordinaires, mais passer par un système de collecte sélective.

Après avoir vérifié les termes et conditions du contrat de vente, l'utilisateur final est donc prié de contacter le fournisseur du dispositif, maison mère ou revendeur, pour mettre en œuvre le processus de collecte et mise au rebut.

Pour plus d'informations, rendez-vous à l'adresse:

http://www.agilent.com/environment/product/index.shtml

4
Installation Procedure

General Information 46
Preparation for Installation 47
Installation 49
Use 51
Operating Procedure 52
Maintenance 54
Disposal 55

Original Instructions

General Information

This equipment is destined for use by professionals. The user should read this instruction manual and any other additional information supplied by Agilent before operating the equipment. Agilent will not be held responsible for any events occurring due to non-compliance, even partial, with these instructions, improper use by untrained persons, non-authorized interference with the equipment or any action contrary to that provided for by specific national standards.

The VacIon Plus series pumps are ion pumps commonly used to create ultra-high vacuum, due to their cleanliness, ability to pump different gases, and maintenance- and vibration-free operation.

The following paragraphs contain all the information necessary to guarantee the safety of the operator when using the equipment. Detailed information is supplied in the appendix "Technical Information".

This manual uses the following standard protocol:

WARNING! **The warning messages are for attracting the attention of the operator to a particular procedure or practice which, if not followed correctly, could lead to serious injury.**

CAUTION! The caution messages are displayed before procedures which, if not followed, could cause damage to the equipment.

NOTE The notes contain important information taken from the text.

Preparation for Installation

The pump is supplied in a special protective packing. If this shows signs of damage which may have occurred during transport, contact your local sales office. When unpacking the pump, be sure not to drop it and avoid any kind of sudden impact or shock vibration to it. Do not dispose of the packing materials in an unauthorized manner. The material is 100 % recyclable and complies with EEC Directive 85/399.

CAUTION! In order to prevent outgassing problems, do not use bare hands to handle components which will be exposed to vacuum. Always use gloves or other appropriate protection.

NOTE Normal exposure to the environment cannot damage the pump. Nevertheless, it is advisable to keep it closed until it is installed in the system, thus preventing any form of pollution by dust.

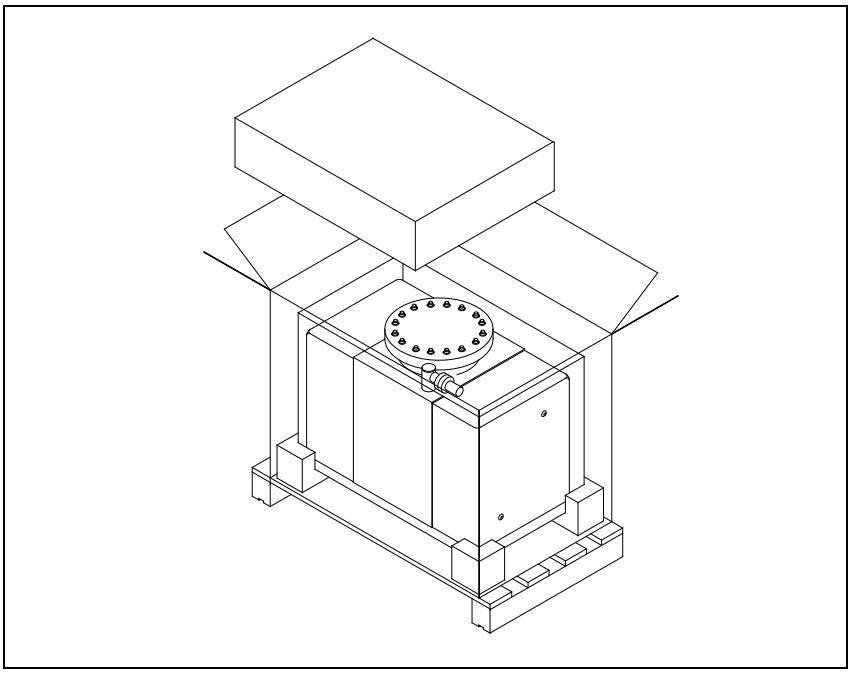

Figure 1

Installation

WARNING! **The pump is heavy and must be handled by means of suitable moving and handling tools.**

Do not install or use the pump in an environment exposed to atmospheric agents (rain, snow, ice), dust, aggressive gases, or in explosive environments or those with a high fire risk. During operation, to obtain the specified operation, the ambient temperature must be between 0 °C and +85 °C.

CAUTION! The pump should be kept sealed with its pinch-off tubulation until it is ready for attachment to the vacuum system.

WARNING!

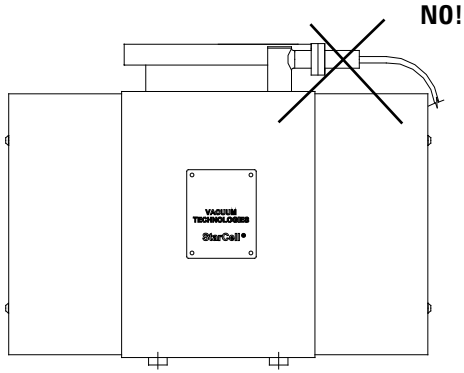

To avoid injury, never connect the high voltage to the pump before it is installed into the system and all the inlet flanges are properly connected or blanked off.

The pump operation is optimized using one of the special Agilent controllers only.

CAUTION! The safety specifications agreement using the pump is guaranteed using the Agilent controller only.

The VacIon Plus pump can be installed in any position. For convenience, a pump is usually mounted vertically with the inlet up. For mounting other than vertical, the pump should be supported using the mounting feet at the bottom of the pump.

For detailed information about the pump installation, see the appendix “Technical Information”.

Use

All the instructions for the correct use of the VacIon Plus pumps are contained in the control unit manual. Read the manual carefully before using the pump. Rough pumping down to $1x10^{-4}$ Torr (mbar) is recommended for the most rapid starting. Roughing with an oil-sealed mechanical pump is not desirable, but when used, a trap in the roughing line is recommended to reduce pressure due to water vapor and oils from the mechanical pump. Be careful to minimize the time that this pump is open to the system and ion pump, since mechanical pump vapors will start diffusing into the system at pressures below $1x10^{-1}$ Torr (mbar) and cause contamination. In systems where oils must be completely eliminated, turbopump roughing pumps should be used. Hygroscopic deposits and hydrogen absorption into titanium may cause starting times to increase with age. During exposure to air, the deposits of titanium compound absorb water vapor. In subsequent start ups, pump heating causes release of the water vapor and some previously pumped hydrogen; thus, the starting time may be lengthened.

Operating Procedure

Check that the controller HV polarity is correct for the pump: positive polarity for Diode pumps and negative for StarCell or Triode pumps. Refer to the relevant pump control unit instruction manual and follow the procedure below when operating the pump:

1. With a clean roughing pump, establish a minimum starting pressure in the vacuum system per the table on page 9 for the type of ion pump.
2. Plug the control unit into a suitable power source and switch the power ON.
3. Observe the voltage, current, and roughing pressure. If started at $5x10^{-2}$ Torr (mbar), a controller voltage of approximately 300 to 400 volts is typical. A current value near the short-circuit current of the control unit could indicate that an unconfined flow discharge exists in the pump and system. A temporary rise in roughing pressure will usually be noticed during any starting procedure.
4. Allow the roughing valve to remain open after turning on the ion pump until an adequate starting pressure is reached. If the ion pump voltage drops after closing the roughing valves, reopen the valve for additional rough pumping. As the pressure decreases, the voltage again will rise, and the roughing valve may be closed.
5. When the voltage has increased to 2-3 kV, place the control unit in the PROTECT condition. The system is now automatically protected against pressure increases to 10^{-4} Torr (mbar) when the pump is left unattended. If such an increase should occur, the control unit will be turned off automatically.
6. The pressure in the pump can also be determined by reading the current and converting this reading to pressure with the appropriate pressure versus current graph shown in the appendix “Technical Information” of this manual.

NOTE The steps on the pressure – current charts are a characteristic of the Agilent controller with “step mode” operation. When the current drawn by the Vaclon pump reaches the specified values, the controller will change the high voltage output to a lower applied voltage.

7 When venting the pump, use dry nitrogen. This will avoid water vapor absorption on the pump walls.

WARNING! **When employing the pump for pumping toxic, flammable, or radioactive gases, please follow the required procedures for each gas disposal. Do not use the pump in presence of explosive gases.**

WARNING! **When the heating element is installed, do not touch the pump during the heating and cooling phases. The high temperature may cause a serious damage.**

CAUTION! Do not put any electronic device near the pump otherwise the magnetic field around it may cause a device malfunctioning.

Maintenance

The VacIon Plus series pump does not require any maintenance. Any work performed on the pump must be carried out by authorized personnel.

WARNING! **Before carrying out any work on the pump, disconnect it from the High Voltage supply.**

If a pump is to be scrapped, it must be disposed of in accordance with the specific national standards.

Disposal

Meaning of the "WEEE" logo found in labels.

The following symbol is applied in accordance with the EC WEEE (Waste Electrical and Electronic Equipment)

Directive. This symbol **(valid only in countries of the European Community)** indicates that the product it applies to must NOT be disposed of together with ordinary domestic or industrial waste but must be sent to a differentiated waste collection system.

The end user is therefore invited to contact the supplier of the device, whether the Parent Company or a retailer, to initiate the collection and disposal process after checking the contractual terms and conditions of sale.

For more information refer to:

http://www.agilent.com/environment/product/index.shtml

5 Technical Information

Description of the VacIon Pump 59
Technical Specification 61
VacIon Plus 300 Starcell 63
VacIon Plus 300 Diode 65
VacIon Plus 300 Noble Diode 66
Outline Drawing 68
Stray Magnetic Field 69
VacIon Plus Pump Installation 72
Inspection Procedure 72
Visual Inspection 72
Vacuum Evaluation 73
Short Circuits 74
Typical Installation 75
Inlet Flange Connection 76
Control Unit Connection 79
Safety Interlock 80
Heater Installation 80
Heater Replacement 82

Original Instructions

Bakeout Operation 82
Bakeout of Vaclon Pump with the Integral Heaters 83
Operating Procedure 84
Maintenance 85
Exchange of Pumping Element 86
Exchange of the High Voltage Feedthrough 87
Leakage Current Check 88
High-potting 89
Pump Troubleshooting 90
Vaclon Plus Pump Replacement Parts and Accessories 91
Vaclon Plus Pump Controllers 92

Description of the VacIon Pump

The Agilent VacIon Plus 300 pumps are ion pumps and are available in three types:

- StarCell
- Noble Diode
- Diode

They operate in the pressure range from 10^{-2} to below 10^{-11} mbar. Virtually all gases and vapors can be pumped successfully with the ion pump. The pumping speed will vary depending on the system pressure, the gas type, and the applied operating voltage. The latter can be optimized using Agilent controllers to achieve the lowest possible operating pressure.

The VacIon Plus StarCell pump allows starting from as high as $5x10^{-2}$ mbar, because ions are prevented from bombarding the system and pump walls at starting pressures, and have high speed for inert gases. The VacIon Plus Diode and Noble Diode pumps require a lower starting pressure (i.e. 10^{-4} mbar).

The tantalum in the Noble Diode pump enhances the noble gas pumping capacity, although it somewhat reduces the high getterable gas pumping speed that the standard diode pump provides.

The VacIon Plus StarCell is the latest variation of the Triode configuration. Its patented design makes this ion pump the only one that can handle a high amount of Noble Gases (better than Noble Diode and Triode) and Hydrogen (comparable to the Diode).

A positive polarity, high voltage supply is required to operate Diode and Noble Diode pumps. A negative polarity high voltage supply is required to operate StarCell pumps since the anode is grounded and the cathode is held at negative potential.

The inlet ConFlat flange is a 8” (NW 150).

Fig. 2 shows the VacIon Plus 300 pump, Fig. 3 shows the main assemblies of the pump.

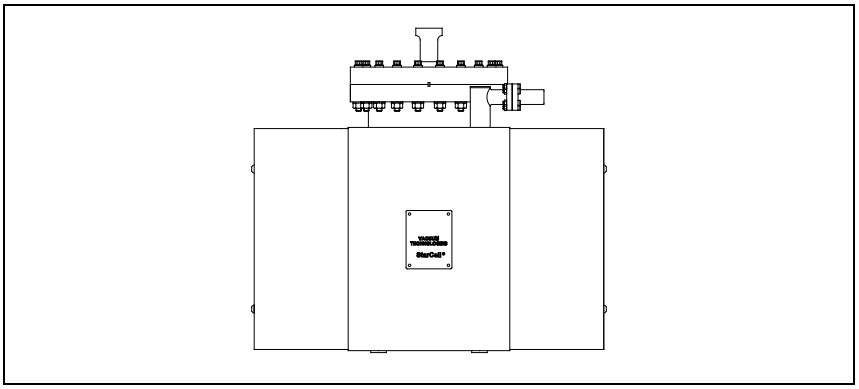

Figure 2 VacIon Plus 300 pump

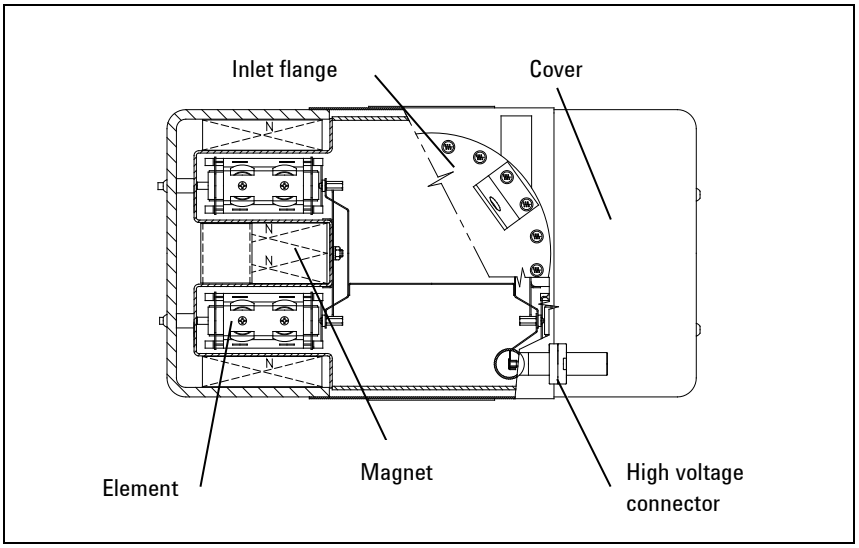

Figure 3 Pump main assemblies

Technical Specification

The following table details the main technical specifications of the VacIon Plus 300 pumps.

Tab. 1

Specification	Model		
	StarCell	**Noble Diode**	**Diode**
Nominal pumping speed for Nitrogen (*) (l/s)	240	260	300
Operating life at 1 x 10^{-6} mbar (hours)	80,000	50,000	50,000
Max starting current	400 mA		
Max baking current	50 mA		
Protect current	100 mA		
Operating voltage (max)	-7000 Vdc +/- 10 %	+7000 Vdc +/- 10 %	
Maximum starting pressure (mbar)	$\leq 1 \times 10^{-2}$	$\leq 1 \times 10^{-3}$	
Ultimate pressure	Below 10^{-11} mbar		
Inlet flange	8" CFF (NW 150) AISI 304 ESR		
Internal volume (litres)	18.6		
Maximum baking temperature (°C)	350		
Temperature limits (°C):			
Pump	400		
Magnet	350		
Flange	500		
Material: Body	AISI 304 SST		
Cathode	Titanium	Titanium/ Tantalum	Titanium
Anode	AISI 304 SST		
Magnet	Ferrite		
Weight, lbs (kg)	149 (69)		

(*) Tested according to ISO/DIS 3556-1-1992

Figures 4 to 11 show the pumping speed vs. pressure diagrams for saturated and unsaturated pumps and the pressure vs. current diagrams for the same pump.

The pumping speed of a newly regenerated (i.e. baked) sputter ion pump decreases during operation until it reaches a stabilized level known as "saturation" (nominal pumping speed). To saturate the VacIon Plus 300 pumps, it normally requires an amount of gas equal to 10 mbar-liters. Consequently, pumps can operate for extended periods of time at low pressures in the non-saturated state, if they are properly conditioned.

Vaclon Plus 300 Starcell

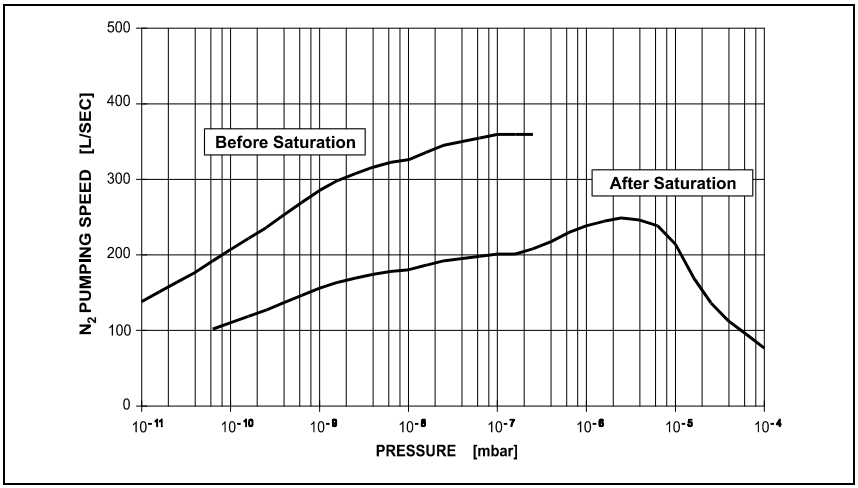

Figure 4 Pumping speed vs pressure for Nitrogen

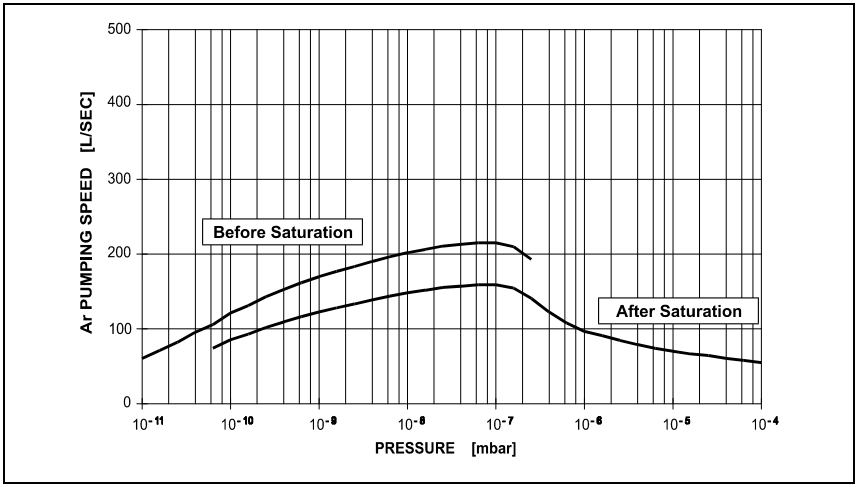

Figure 5 Pumping speed vs pressure for Argon

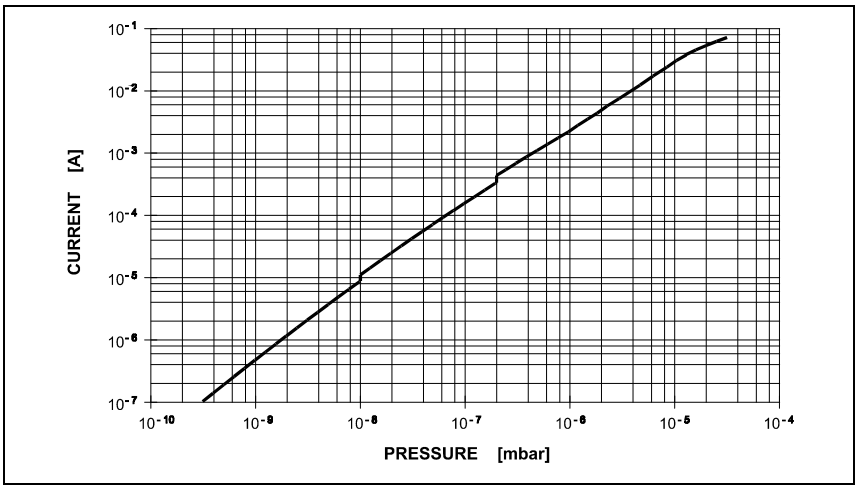

Figure 6 Pressure vs current diagram

Vaclon Plus 300 Diode

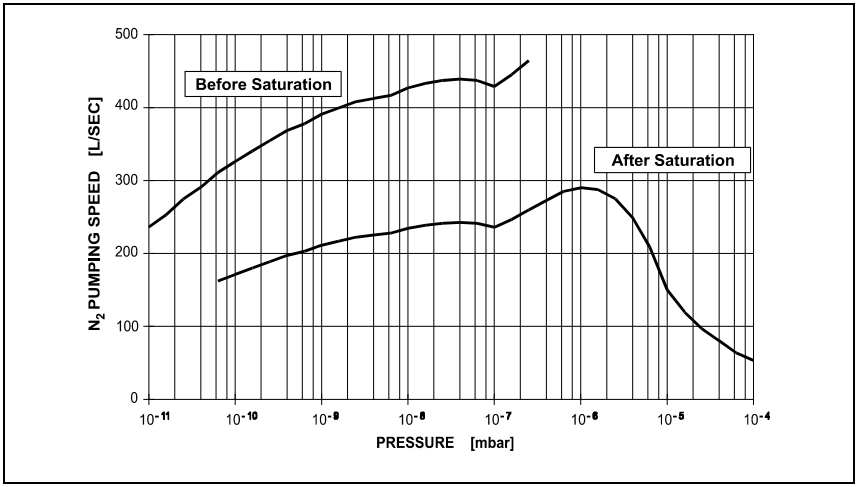

Figure 7 Pumping speed vs pressure for Nitrogen

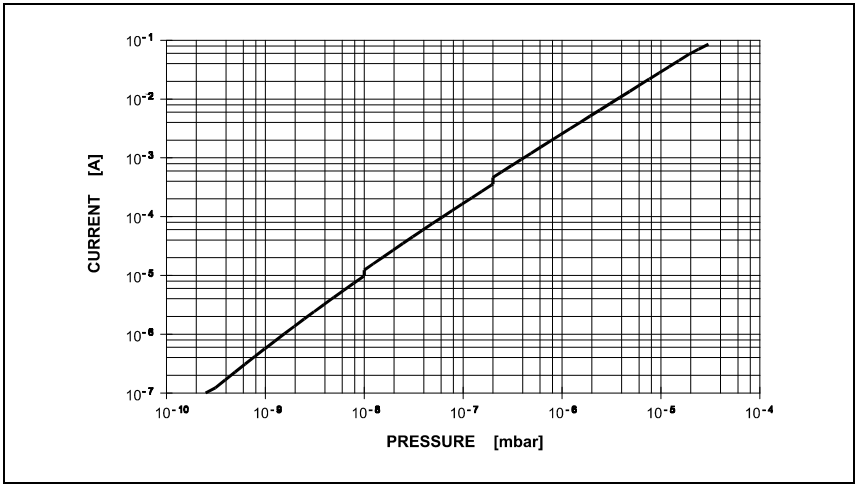

Figure 8 Pressure vs current diagram

Vaclon Plus 300 Noble Diode

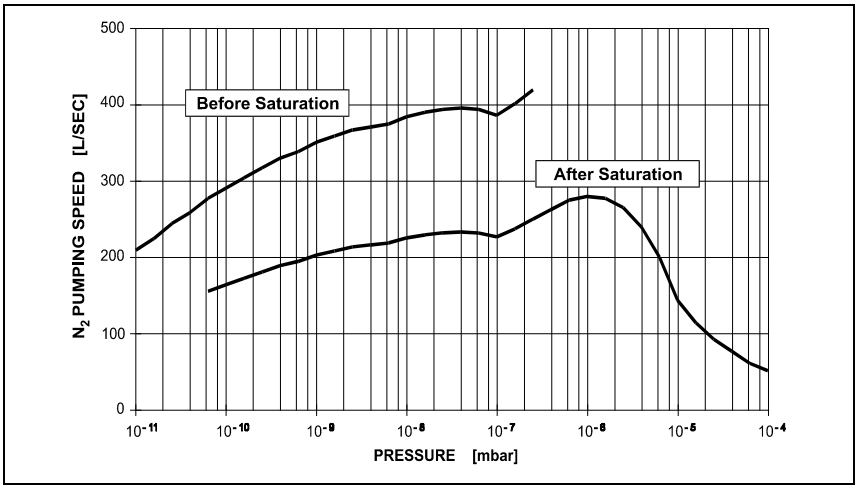

Figure 9 Pumping speed vs pressure for Nitrogen

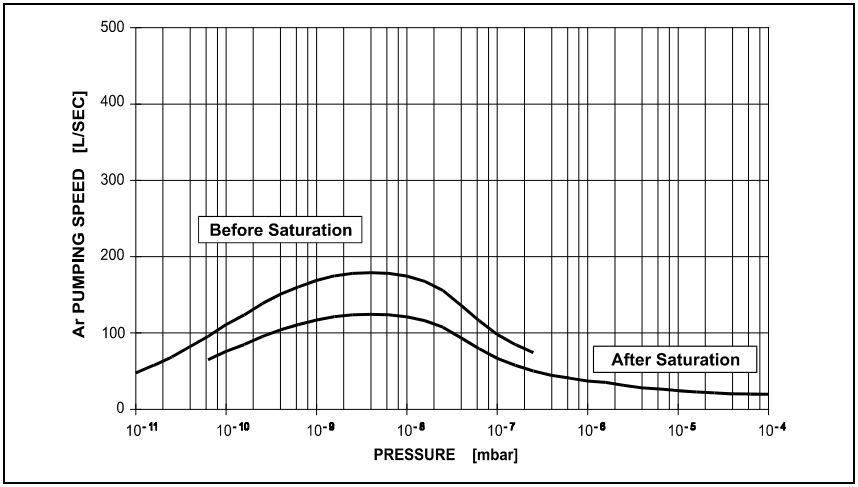

Figure 10 Pumping speed vs pressure for Argon

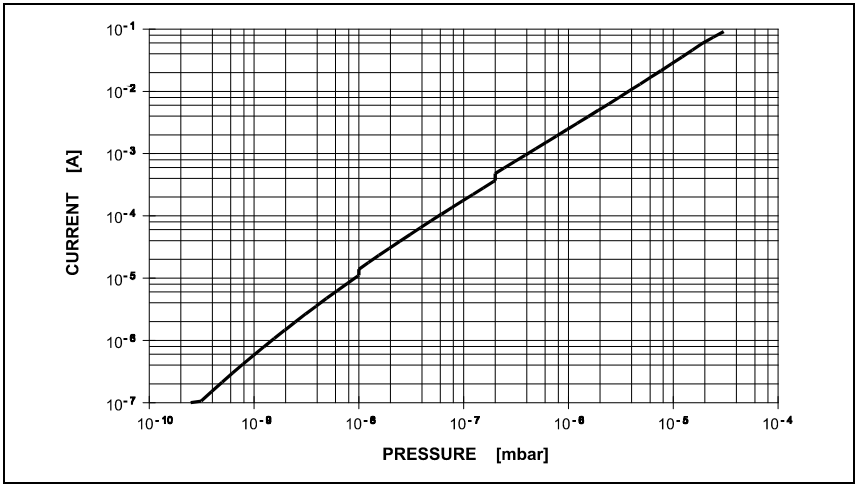

Figure 11 Pressure vs current diagram

Outline Drawing

The following figure shows the outline drawing for the VacIon Plus pump.

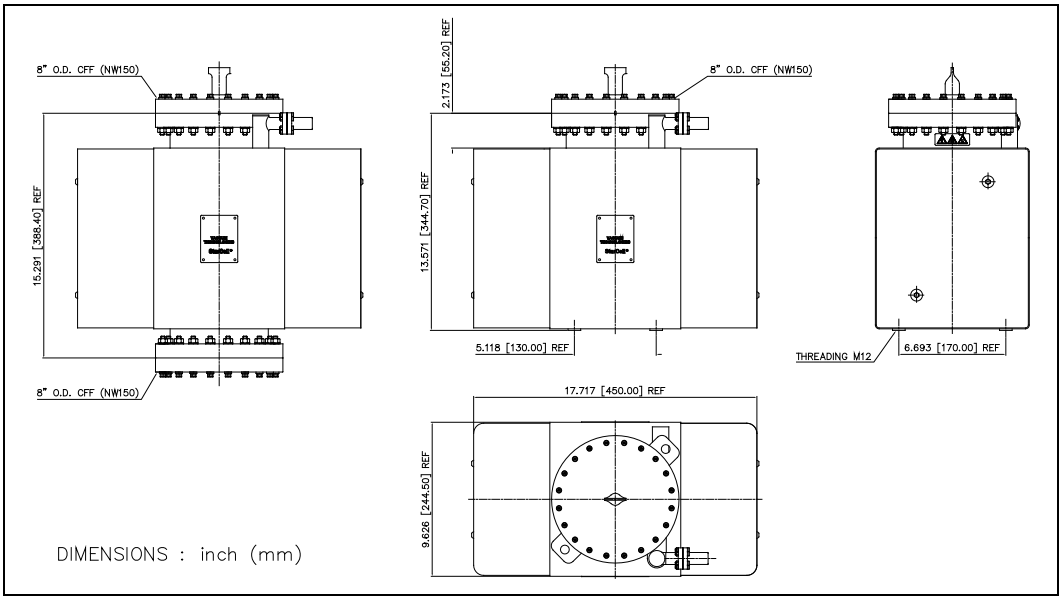

Figure 12 VacIon Plus pump outline drawing

Stray Magnetic Field

Curves of stray magnetic field strength along the centre line of the pump and in the plane of the flange as a function of distance from the pump are shown in Figs. 14, 15, 16, 17 and 18, where Bx is the magnetic field along X axis, By is along Y axis and Bz is along Z axis.

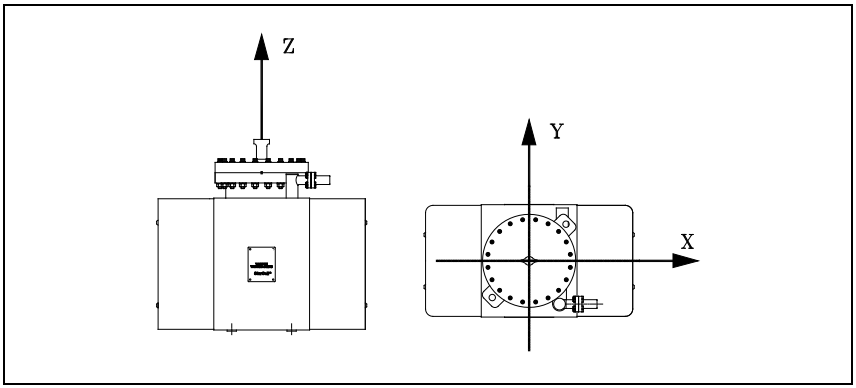

Figure 13 VacIon Plus pump axis identification

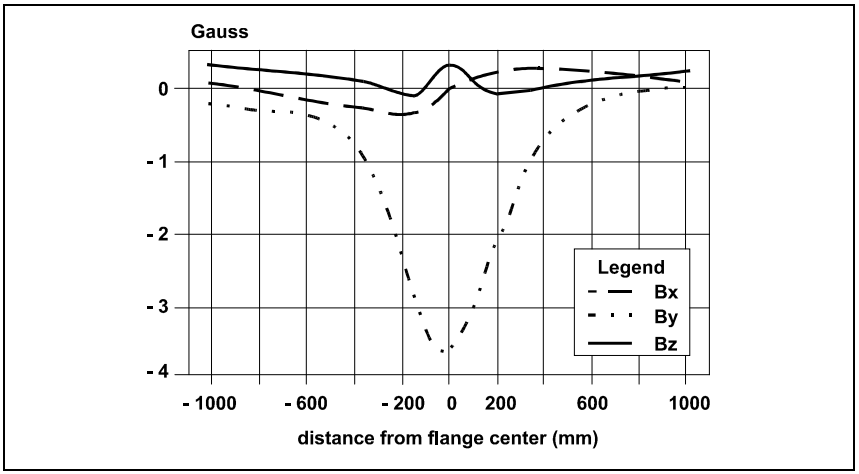

Figure 14 Stray magnetic field from flange along X axis (z = 0 mm)

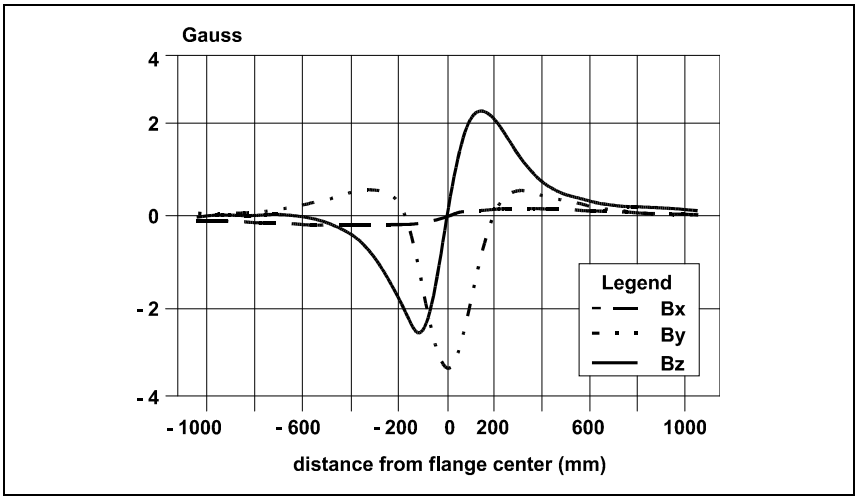

Figure 15 Stray magnetic field from flange along Y axis (z = 0 mm)

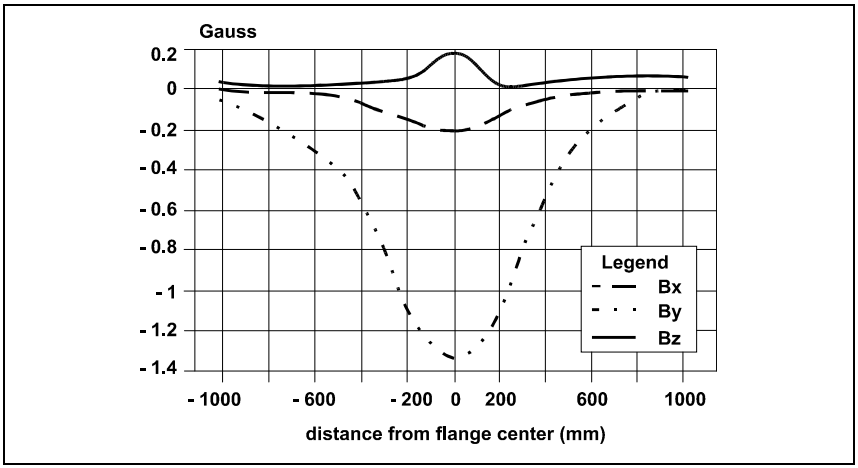

Figure 16 Stray magnetic field from flange along X axis (z = 100 mm)

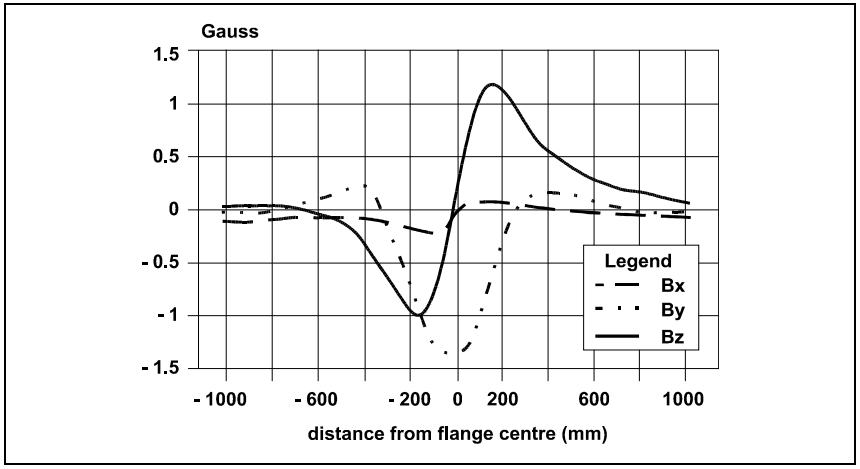

Figure 17 Stray magnetic field from flange along Y axis (z = 100 mm)

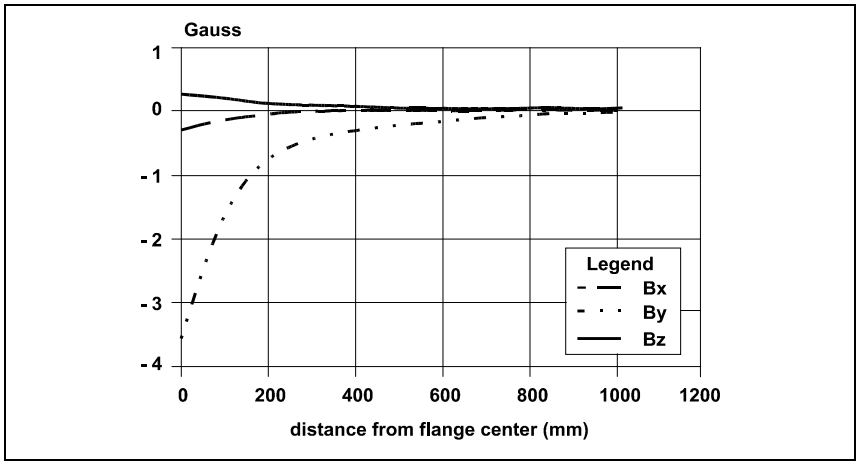

Figure 18 Stray magnetic field from flange along Z axis

VacIon Plus Pump Installation

Inspection Procedure

VacIon Plus pumps are evacuated, baked out, sealed and leak-checked at below $1x10^{-10}$ mbar prior shipping. The following information and procedures can be used to optimize the vacuum integrity of a VacIon Plus pump before installation.

Visual Inspection

Inspect the pump and magnet for physical damage which may have occurred during shipment. Inspect the pinch-off seal. If it is open, the pump is at atmospheric pressure.

WARNING! **The pinch-off seal is extremely sharp. Be careful.**

A VacIon Plus pump that has been exposed to atmosphere during shipment, or while in storage, will operate properly if it has not been damaged.

The pump is not harmed by such exposure, although it is good practice to keep it under vacuum when not in use to exclude dust and the accumulation of water vapor from the environment.

Vacuum Evaluation

The ion pump is shipped in an evacuated condition. Before removing the shipping flange for installation on a vacuum system, it is recommended that the pump be started briefly to verify vacuum integrity and proper operation.

To verify the vacuum integrity of the new pump before venting:

1 Connect the pump to the control unit as directed in the instruction manual of the control unit.

WARNING!

The high voltage which is present in the ion pump from the control unit can cause severe injury or death.

Be sure that the high voltage cable is proper connected to the ion pump and its power unit. Make sure that the pump is well grounded.

---

2 With the main power switch in the OFF position, plug the control unit into a suitable power source.

3 Turn the power to ON.

4 Observe the reading for an indication of one of the following conditions:

   a If the pump is free of leaks and is at a low pressure, the pressure indication shall within 10 minutes fall to or below the 10^{-8} mbar range as the volume of gas is pumped.

   b If the pressure inside the pump is at or near atmospheric level, an arc may strike inside the high voltage feedthrough giving a popping sound and the pump current will fluctuate. If this occurs, turn the power OFF immediately.

5 If the vacuum integrity has been lost, the pump should be leak-checked with a mass spectrometer leak detector before installation on the system.

Short Circuits

If there is a short circuit between the anode and cathodes in the pump (or cathode to pump body), the short-circuit current of the control unit will be drawn and low voltage will be indicated. If a short circuit exists in the control unit or high voltage cable and connector, low voltage will also be observed when the high voltage connector is disconnected from the pump (refer to the control unit manuals). An ohm meter reading on the pump feedthrough may not be effective in finding a short. Short circuits may be caused by mechanical shock to the pump. If the pump is shorted, contact Agilent.

Typical Installation

A typical installation is shown in figure 19 and consists of:

1. VacIon Plus pump.
2. A Valve to seal off the pump from the rest of the system (if required).
3. The control unit.
4. A clean roughing pump (i.e. turbo or sorption).
5. A thermocouple gauge capable of indicating pressure from atmosphere to 10^{-3} mbar range.
6. A valve to seal off the roughing pump from the vacuum chamber. Roughing lines are usually made of stainless steel or copper tubing, or other low vapor pressure material.
7. High voltage cable.
8. Backing pump (diaphragm or scroll).

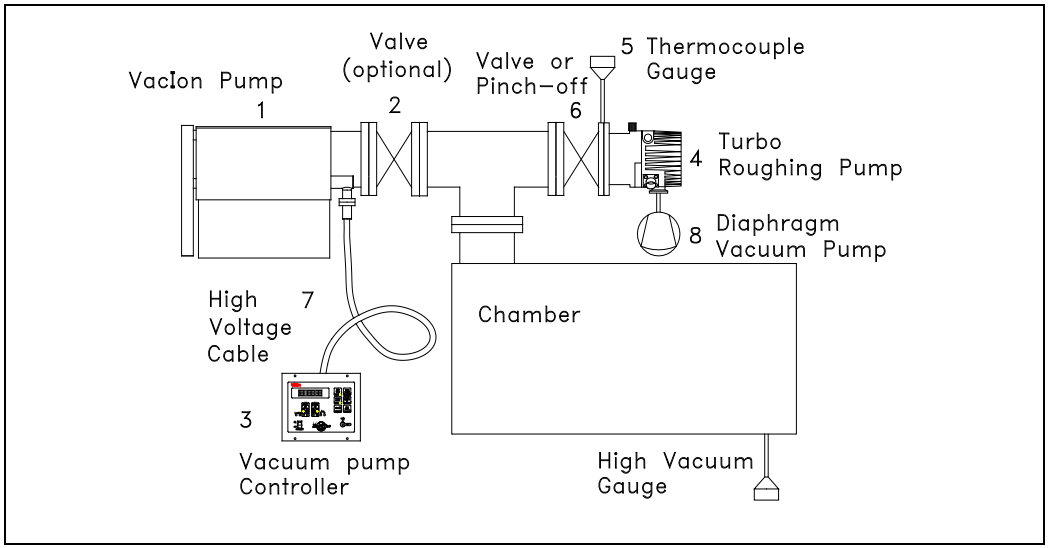

Figure 19 Typical installation

Inlet Flange Connection

The pump should be mounted allowing a sufficient clearance for installation and removal of the high voltage connector.

The pump should be kept sealed with its pinch-off tubulation until it is ready for attachment to the vacuum system. This avoids accumulation of dust and other undesirable materials. Before breaking the pinch-off seal, consult the inspection procedure (see preceding paragraph).

Vent the ion pump by opening the pinch-off tubulation in a clean area free from smog, dust, pollen, etc. Venting with dry nitrogen gas is further recommended. This can be done by placing a clean polyethylene bag over the ion pump flange. Small pumps can be placed inside of the bag. Purge the bag with clean, dry nitrogen for several minutes, then reach into the bag and release the internal vacuum using pliers to open the copper tube pinch-off.

CAUTION! Do not open the pinch off-seal with a saw or grinder. These methods will cause metal particles to be drawn into the pump by the inrushing air as the pump is opened.

WARNING! **The pinch-off seal is extremely sharp. Be careful when opening. Watch your fingers.**

Use appropriate procedures to maintain the clean condition of the pump and vacuum system.

Unscrew the main flange bolts and lift the blank flange with the help of a bolt screwed into the available threaded hole. Remove the ConFlat flange and the copper gasket plate. Some particles of copper oxide may adhere to the outer edge of the flange gasket. Be careful not to allow them or any other foreign materials to fall into the pump.

Connect the ion pump to the vacuum chamber with a short length and large diameter tubulation in order to retain as much pumping speed as possible. Proceed as follows:

1. Inspect the mating flanges for cleanliness and absence of scratches on the knife edge.
2. Place a new copper gasket between pump flange and vacuum chamber flange.
3. Bolt mating flanges of the pump to the chamber with the screws provided with the ion pump. For flanges over NW 35 (2.75" o.d.) also mount washers below the nuts and screw heads.
4. Use silver-plated screws or apply high temperature lubricant to the screw threads. Lubrication simplifies sealing and disassembly. A recommended lubricant is Fel-Pro C-100.

NOTE Lubrication is essential to prevent galling of the nut and screw after bakeout.

5. Attach the nuts and tighten each one to 6 – 11 Nm (4.5 - 8 ft.-lbs) of torque. After tightening a nut, always tighten the opposite nut with respect to the center of the flange. This will partially close the gap between the flange faces.
6. Repeat the sequential tightening for two more cycles.
7. Continue tightening the bolts until the flange faces meet and a pronounced increase in torque is felt.

Note that it’s not possible to install the screws from the lower side, but only from the upper side of the flange. To allow complete flexibility in the installation, a stud mounting kit is available (see Fig. 20). For ordering information refer to the “VacIon Plus Pump Replacement Parts and Accessories” paragraph.

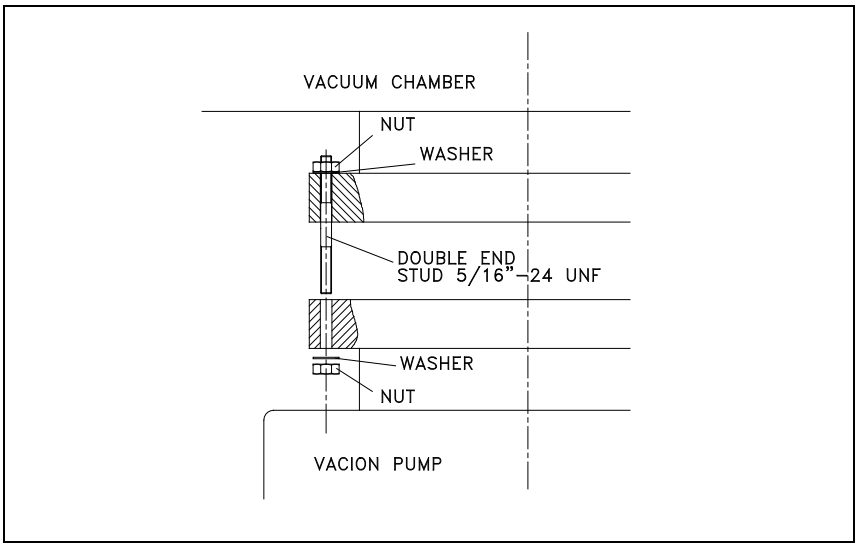

Figure 20 Stud mounting kit

Control Unit Connection

WARNING!

The high voltage present in the high voltage cable which connects the control unit to the ion pump, can cause severe injury or death. Before mounting the high voltage connector of the cable on the pump high voltage feedthrough, or before removing it, be sure the main power is removed from the control unit.

WARNING!

To avoid injury, never connect the high voltage to the pump before it is installed into the system and all the inlet flanges are properly connected or blanked off. Make sure that the pump is well connected to the grounded vacuum system.

WARNING!

Before removing the high voltage connector of the cable from the control unit, be sure the main power is removed from the control unit. Wait at least 10 seconds after removing the main power from the control unit, to allow capacitors to discharge completely.

To disconnect the coaxial high voltage cable from the controller, slide the safety locking sleeve (very little sleeve travel is required) from the control unit and at the same time pull on the male end of the cable connector to remove it from the socket on the control unit.

Safety Interlock

The VacIon Plus pump feedthrough in conjunction with the cable P/N 929-0705, -0707, 0708 and -0709, when used with the Agilent control units, allows the operation of the “High Voltage Cable Safety Interlock” feature.

When the high voltage cable connector is disconnected from the VacIon Plus pump feedthrough, the high voltage is automatically switched off by the control unit.

Heater Installation

The heating element (Fig. 21) is composed of two plates to be fixed to the pump case.

NOTE It is advisable to make a 10 – 15 minutes initial operation of the heater in a ventilated room to allow the evaporation of residual internal alloying elements.

To install the element proceed as follows (Fig. 22):

1. Before removing the pole pieces, mark their position and orientation for an easier assembly later on.
2. Position the heating plate (1) inserting the threaded pins positioned on the pump jacket into the holes of the plate. Be sure that the written heating plate side is towards you;
3. Position the other heating plate (2) in the same way as the heating plate (1);
4. Reinstall the pole pieces;
5. Position the connection box (3) on the upper side of the pump in an oppose position of the HV feedthrough with respect to the flange, and fix it to the pump case.

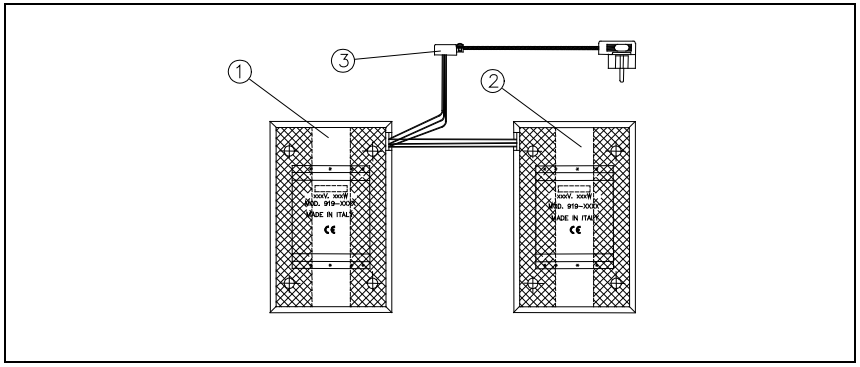

Figure 21 Heating element

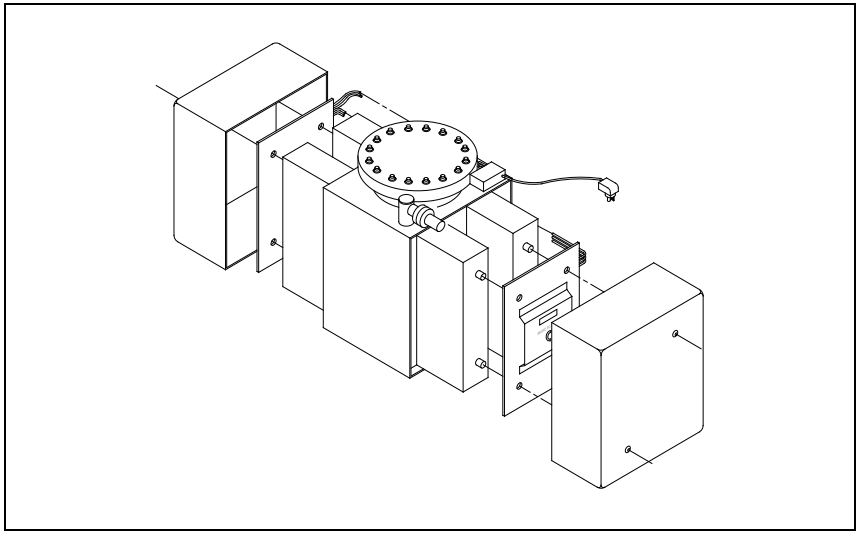

Figure 22 Heating element installation

Heater Replacement

To replace the heater element proceed as follows:

1. Disconnect the pump from the high voltage;
2. Disconnect the heater element from the main supply;
3. Disconnect the heater plates from the pump case;
4. Disconnect the heater connection box from the upper side of the pump;
5. Install the new heater elements as described in the paragraph “HEATER INSTALLATION”.

Bakeout Operation

When a VacIon pump does not reach the desired base pressure, and there are no leaks, it is necessary to bake the system. This is done by heating the pump and all the components in the system, and is generally required to achieve base pressure less than 10^{-8} mbar.

1. Heat the pump body and the system with a bakeout oven unit or heating strips to temperatures between 150 °C and 220 °C (220 °C is the maximum allowable for most bakeable high voltage cables). This temperature is high enough to degas the pump surfaces of water vapor without damaging the magnet and high voltage connector. Note that the system components must be compatible with the bakeout temperature. The heating must be approximately even on all surfaces or evaporated water will condence on the colder surfaces resulting in an incomplete bake and preventing achievement of UHV vacuum pressure.
2. Leave the pump control unit on and monitor the pressure. Agilent recommends that current during bake not exceed 50 mA; if this value is exceeded, turn the bakeout off and then on again when low pressure is restored.
   To control the heaters and to monitor the high pressure limit during bakeout, an automatically controlled relay may be used.
3. Bake the VacIon Plus pump for at least 24 hours. Longer bakeout periods are recommended when the pump has been used with heavy gas loads or when UHV pressure, 10^{-9} mbar or less is desired.

4 As the pump and system cool down to room temperature, a drop in pressure should be observed.

Note that the ion pump can be also baked when switched off, into an external turbo pump through a bakeable isolation valve.

Bakeout of VacIon Pump with the Integral Heaters

1 The integral heaters are to be powered with the appropriate voltage. (Please refer to the inscription on the heaters to apply correct voltage).

2 The integral heaters are designed to provide a temperature of 250 °C to 300 °C when the pump is wrapped in a 3-fold aluminium foil.

NOTE A three-layer foil wrapping is advisable and sufficient to achieve full bakeout/regeneration if the standard European heaters (230 Vac) are operated at 240 Vac, thus preventing overheating.

3 Bakeout the VacIon pump for 24 hours. If the pump is used in heavy gas load applications, it is recommended to bakeout the pump for a longer period.

4 Wait until the pump cools down to room temperature and recovers its base pressure before using it in the application.

WARNING! **Do not touch the pump during the heating and cooling phases. The high temperature may cause serious damage.**

Operating Procedure

1. Using a clean roughing pump, evacuate the system to a minimum starting pressure as stated by the technical specification. 10^{-6} mbar or less is recommended. To reach this pressure the use of an oil free turbo-molecular roughing pump is recommended.
2. When starting an ion pump, a slight increase in vacuum pressure is normal as the internal components are heated and outgassed. If possible leave the roughing pump connected to the system while starting the ion pump. This will make the startup faster and easier.
3. Connect the control unit to a suitable power source and switch the power on.
4. Switch on high voltage to the pump and observe the current and voltage. Fastest starting is obtained using a high applied voltage, 7 kilovolts for example. The applied voltage may be reduced later to optimize pumping and achieve the lowest vacuum pressure.
5. If started at 10^{-4} mbar, the voltage will start at approximately 800 volts and increase to full voltage as the pump starts operating. The current will start at several milliamps and slowly decrease to microamps or nanoamps as low vacuum pressure is achieved.
6. When first starting the pump, if the voltage decreases instead of increasing, reduce the vacuum pressure then start the ion pump again.
7. When the pump reaches its full operating voltage, you may close the roughing valve.
8. If the pump does not start after 30 minutes of pumping, see the section PUMP TROUBLESHOOTING.
9. Once the pump reaches its base pressure with stable voltage and current, the ion pump may be baked at high temperature if required per the section titled BAKEOUT OPERATION.
10. To stop the ion pump, simply switch off the high voltage. The pump surfaces will continue to pump for a few minutes depending on the system pressure.

11 When venting the pump use clean, dry nitrogen. This will avoid water absorption on the pump surfaces and make subsequent pump downs easier.

Maintenance

WARNING!

The high voltage present in the high voltage cable which connects the control unit to the ion pump, can cause severe injury or death. Before mounting the high voltage connector of the cable on the pump high voltage feedthrough, or before removing it, be sure the main power is removed from the control unit.

Before removing the high voltage connector of the cable from the control unit, be sure the main power is removed from the control unit. Wait at least 10 seconds after removing the main power from the control unit, to allow capacitors to discharge completely.

VacIon Plus pumps are maintenance free. In case of life time expiry or premature failure of the pump, please contact your nearest Agilent sales/service office for repair.

The VacIon Plus 300 pumps are designed with exchangeable high-voltage feedthrough and pump elements.

Exchange of Pumping Element

Remove the internal high-voltage connections.

1. Remove the internal high-voltage connections.
2. Remove the element holding brackets.
3. Pull the element out of the pocket and remove it through the inlet flange.
4. Clean the internal part of the pump with the appropriate solvent.
5. Put in the new element through the inlet flange. Make sure that the element is fixed at its rear by the two press-formed buttons of the element pocket, and at its front by the element holding clamp.
6. Reattach the high-voltage connections and test for continuity from the feedthrough.
7. Place a blank flange over the pump inlet and leak-check it with a leak detector.
8. Bake out the blanked off pump while it is operating, and leave it to cool down; then verify that the base pressure is below 10^{-9} mbar.

Exchange of the High Voltage Feedthrough

CAUTION! The high voltage feedthrough contains a ceramic insulator that can be damaged if excessive force is applied in torque, in bending, or in tension. When installing or removing the feedthrough, the applied torque should not exceed 2 Nm. Rotate the feedthrough gently when making the threaded connection to avoid excessive force.

1. Remove the 6 bolts of the Mini-ConFlat flange connection (see Fig. 23).
2. Remove the cable connection disc.
3. Gently relieve the feedthrough from the metal gasket connection and turn the feedthrough counterclockwise until it is completely detached from the internal high voltage threaded connection.
4. Replace the feedthrough and the copper gasket, making sure that the feedthrough is connected to the pumps internal connector. Check that the feedthrough is not shorted.
5. Bake out the pump while it is operating, and leave it to cool down; then verify that the base pressure is below 10^{-9} mbar.

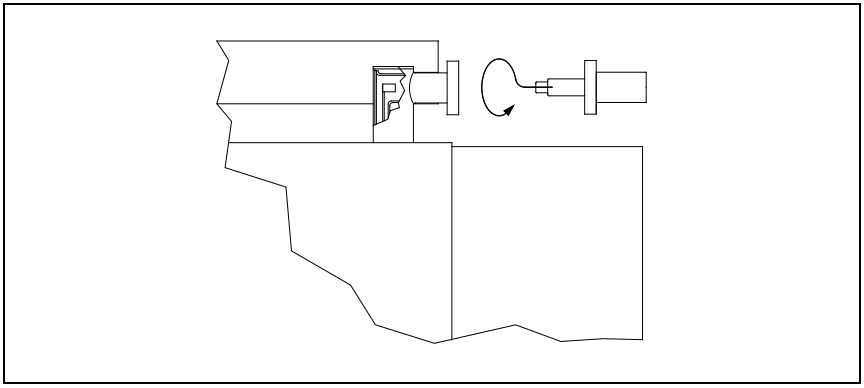

Figure 23 High voltage feedthrough connection

Leakage Current Check

If the pump current reading is to be used as pressure measurement, check the pump leakage currents as follows:

1. Turn off the pump control unit.
2. Remove the pump magnet.
3. Turn on the pump control unit and wait for current stabilization. The current reading should not be higher than 300 nA. Make sure that the control unit and the high voltage cable leakage current is negligible.
4. If leakage current comes from the pump, perform "high-potting" per the following procedure; then recheck the pump and install the magnet.
5. If it is not possible to "high-pot" the pump, the pressure reading is based by the leakage current value.

High-potting

A constant pump current when no vacuum leak exists is often caused by field emission currents which prevent the use of the pump current as a UHV pressure indicator. To reduce this field emission current, "high-potting" should be performed. "High-potting" is the term used to describe the application of higher than normal operating voltage (8 kV AC, max. 50 mA) for the purpose of burning off "whiskers" (sharp edges) on the pump cathode.

High-potting should be done under vacuum and preferably without pump magnets installed (to reduce the drawn current).

High-potting must be done carefully and in voltage steps since uncontrolled arcing inside the pump can cause permanent damage. Therefore slowly increase the applied voltage and watch the current meter for indication of arcing inside the pump as whiskers are burned away. If arcing occurs wait at this voltage until the current is stable again. Then slowly increase voltage again in steps up to a maximum voltage. The maximum voltage may be applied to the pump for a period of about 15 seconds. This should effectively remove any "whiskers" or sharp edges on the pump cathode.

WARNING!

Voltages developed in the High Potter power supply are potentially lethal. Use caution during operation and ensure correct grounding connection.

Pump Troubleshooting

Tab. 2

Symptom	Possible cause	Correction procedure
1) – Slow starting	Starting vacuum pressure too high.	Reduce pressure to 10^{-5} mbar recommended 10^{-4} mbar minimum.
2) – Slow starting (more than 30 minutes).	Air leaks which limit pressure to above 10^{-6} mbar and cause longer starting time.	Leak check the vacuum system with a helium leak detector.
3) – Slow pump-down due to long exposure of viton parts to air.	Viton releases considerable gas after long exposure to air. (A bell-jar system which reached 2×10^{-8} mbar in 24 hours after 30 minutes air exposure, will only reach 1×10^{-7} mbar in 24 hours after 20 hours air exposure).	With the system under vacuum, pump for several days, or heat to 100-150 °C for up to 15 hours.
4) – Slow pump-down due to absorption of vapours on pump and system walls.	Vapours and gases admitted to a system are absorbed on the walls of the system and pump. Subsequent reduction in pressure depends on the rate of depletion of this vapour. Heavy hydrocarbons are most troublesome because of their relative low vapour pressure and they are very difficult to remove, even by baking.	Bake the system walls, thereby accelerating the desorption process. Baking mobilizes the vapours so they can be cracked and pumped by discharge (see section “BAKEOUT OPERATION”).
5) – Slow starting or slow pump-down.	High voltage feedthrough is leaking.	Replace the feedthrough.
6) – Current higher than expected at any given pressure.	Ion pump leakage current causing higher pressure reading.	Highpot the pump.

Symptom	Possible cause	Correction procedure
7) – System fails to achieve desired UHV vacuum pressure.	System not fully baked. Water vapor limits base pressure.	Bake the system walls, thereby accelerating the desorption process. Baking mobilizes the vapours so they can be cracked and pumped by discharge (see section “BAKEOUT OPERATION”).
8) – System fails to achieve desired UHV vacuum pressure.	System not appropriately cleaned for UHV. Excessive outgassing from walls limits base pressure.	Clean all components for UHV and bake the system again.

Vaclon Plus Pump Replacement Parts and Accessories

Tab. 3

	Part Number		
	Diode	**Noble Diode**	**Starcell**
Basic pump	919-1610	919-1620	919-1640
Pump with options			
With heaters installed			
(120 V)	919-1611	919-1621	919-1641
(220 V)	919-1612	919-1622	919-1642
Double-ended	919-1650	919-1660	919-1680
Double-ended with			
heaters (120 V)	919-1651	919-1661	919-1681
installed (220 V)	919-1652	919-1662	919-1682
Cables and accessories			
HV rad. Resist. cable, with interlock		929-0705	

Replacement parts			
HV Feedthrough		959-5125	
Pumping elements (q.ty 4 needed)	919-9040	919-9045	919-9030
Heaters (power: 480 W) (120V) (220V)		 919-0075 919-0074	
Copper gasket for 6″ inlet flange (10-pack, individually sealed)		FG-0600-CI	
Nut and bolt set for 6″ inlet flange		FB-0450-C12	
Copper gasket for 1 1/3" CF feedthrough flange (10-pack, individually sealed)		FG-0133-CI	
Nut and bolt set for 1 1/3" CF feedthrough flange, 8-32x3/4 (25-pack)		FB-0133-C	

For a complete overview of Agilent's extensive vacuum product line, please refer to the Agilent Vacuum Catalogue.

Vaclon Plus Pump Controllers

Please refer to the Agilent Vacuum Catalogue to choose the correct controller for each pump.

Agilent Technologies

Vacuum Products Division

Dear Customer,

Thank you for purchasing an Agilent vacuum product. At Agilent Vacuum Products Division we make every effort to ensure that you will be satisfied with the product and/or service you have purchased.

As part of our Continuous Improvement effort, we ask that you report to us any problem you may have had with the purchase or operation of our products. On the back side you find a Corrective Action request form that you may fill out in the first part and return to us.

This form is intended to supplement normal lines of communications and to resolve problems that existing systems are not addressing in an adequate or timely manner.

Upon receipt of your Corrective Action Request we will determine the Root Cause of the problem and take the necessary actions to eliminate it. You will be contacted by one of our employees who will review the problem with you and update you, with the second part of the same form, on our actions.

Your business is very important to us. Please, take the time and let us know how we can improve.

Sincerely.

Giampaolo LEVI

Vice President and General Manager
Agilent Vacuum Products Division

Note: Fax or mail the Customer Request for Action (see backside page) to Agilent Vacuum Products Division (Torino) – Quality Assurance or to your nearest Agilent representative for onward transmission to the same address.

CUSTOMER REQUEST FOR CORRECTIVE / PREVENTIVE / IMPROVEMENT ACTION

TO: AGILENT VACUUM PRODUCTS DIVISION TORINO – QUALITY ASSURANCE FAX

N°: XXXX-011-9979350

ADDRESS: AGILENT TECHNOLOGIES ITALIA S.p.A. – Vacuum Products Division –

Via F.lli Varian, 54 – 10040 Leinì (TO) – Italy

E-MAIL: vpd-qualityassurance_pdl-ext@agilent.com

NAME	COMPANY	FUNCTION
ADDRESS: TEL. N° : FAX N° : E-MAIL:		
PROBLEM / SUGGESTION : REFERENCE INFORMATION (model n°, serial n°, ordering information, time to failure after installation, etc.): DATE		
CORRECTIVE ACTION PLAN / ACTUATION (by AGILENT VPD)	LOG N°	

XXX = Code for dialing Italy from your country (es. 01139 from USA; 00139 from Japan, etc.)

Agilent Technologies

Agilent Technologies

Vacuum Products Division
Instructions for returning products

Dear Customer,

Please follow these instructions whenever one of our products needs to be returned.

Complete the attached **Request for Return form** and send it to Agilent Technologies (see below), taking particular care to include the completed **Health and Safety** declaration Section. No work can be started on your unit until we receive a completed copy of this form.
After evaluating the information, Agilent Technologies will provide you with a **Return Authorization (RA) number** via email or fax, as requested. Note: Depending on the type of return, a Purchase Order may be required at the time **the Request for Return is submitted**. We will quote any necessary services (evaluation, repair, special cleaning, eg).

Product preparation

- Remove all accessories from the core product (e.g. inlet screens, vent valves).
- Prior to shipment and if applicable for your product, drain any oils or other liquids, purge or flush all gasses, and wipe off any excess residue.
- If ordering an Advance Exchange product, please use the packaging from the Advance Exchange to return the defective product.
- Seal the product in a plastic bag, and package product carefully to avoid damage in transit. You are responsible for loss or damage in transit.
- Include a copy of the Health and Safety Declaration in the shipping documentation on the outside of the shipping box of your returning product.
- Clearly label package with RA number. Using the shipping label provided will ensure the proper address and RA number are on the package. Packages shipped to Agilent without a RA clearly written on the outside cannot be accepted and will be returned.
- Return only products for which the RA was issued.

Shipping

- Ship to the location specified on the printable label, which will be sent, along with the RA number, as soon as we have received all of the required information. Customer is responsible for freight charges on returning product.
- Return shipments must comply with all applicable Shipping Regulations (IATA, DOT, ADR, etc.) and carrier requirements.

RETURN THE COMPLETED **REQUEST FOR RETURN** FORM TO YOUR NEAREST LOCATION:

EUROPE:	**NORTH AMERICA:**	**PACIFIC RIM:**
Fax: 00 39 011 9979 330	Fax: 1 781 860 9252	please visit our website for individual office information
Fax Free: 00 800 345 345 00	Toll Free: 800 882 7426	http://www.agilent.com
Toll Free: 00 800 234 234 00	vpl-ra@agilent.com	
vpt-customercare@agilent.com		

Agilent Technologies

TERMS AND CONDITIONS

Please read the terms and conditions below as they apply to all returns and are in addition to the Agilent Technologies Vacuum Product Division – Products and Services Terms of Sale.

- Unless otherwise pre-negotiated, customer is responsible for the freight charges for the returning product. Return shipments must comply with all applicable Shipping Regulations (IATA, DOT, etc.) and carrier requirements.
- Agilent Technologies is not responsible for returning customer provided packaging or containers.
- Customers receiving an Advance Exchange product agree to return the defective, rebuildable part to Agilent Technologies within 15 business days. Failure to do so, or returning a non-rebuildable part (crashed), will result in an invoice for the non-returned/non-rebuildable part.
- Returns for credit toward the purchase of new or refurbished Products are subject to prior Agilent approval and may incur a restocking fee. Please reference the original purchase order number.
- Units returned for evaluation will be evaluated, and a quote for repair will be issued. If you choose to have the unit repaired, the cost of the evaluation will be deducted from the final repair pricing. A Purchase Order for the final repair price should be issued within 3 weeks of quotation date. Units without a Purchase Order for repair will be returned to the customer, and the evaluation fee will be invoiced.
- Products returned that have not been drained from oil will be disposed.
- A Special Cleaning fee will apply to all exposed products
- If requesting a calibration service, units must be functionally capable of being calibrated.

Agilent Technologies

Vacuum Products Division
Request for Return Form

Customer information		
Company :	Contact Name:	
Address:	Tel:	Fax:
	Email:	

Equipment			
Product description	Agilent PartNo	Agilent Serial No	Original Purchasing Reference
Failure description		Type of process (for which the equipment was used)	

Type of return

☐ Non Billable ☐ Billable ➡ New PO # (hard copy must be submitted with this form): _____

☐ Exchange ☐ Repair ☐ Upgrade ☐ Consignment/Demo ☐ Calibration ☐ Evaluation ☐ Return for Credit

Health and safety

The product has been exposed to the following substances:
(by selecting 'YES' you MUST complete the table to the right)

Substances (please refer to MSDS forms)

* Agilent will not accept delivery of any product that is exposed to radioactive, biological, explosive substances or dioxins, PCB's without written evidence of decontamination.

		Trade name	Chemical name	Chemical Symbol	CAS Number
Toxic	☐ YES ☐ NO				
Harmful	☐ YES ☐ NO				
Corrosive	☐ YES ☐ NO				
Reactive	☐ YES ☐ NO				
Flammable	☐ YES ☐ NO				
Explosive (*)	☐ YES ☐ NO				
Radioactive (*)	☐ YES ☐ NO				
Biological (*)	☐ YES ☐ NO				
Oxidizing	☐ YES ☐ NO				
Sensitizer	☐ YES ☐ NO				
Other dangerous substances	☐ YES ☐ NO				

Goods preparation

If you have replied YES to one of the above questions. Has the product been purged? ☐ YES ☐ NO
If yes, which cleaning agent/method:

Has the product been drained from oil? ☐ YES ☐ NOT APPLICABLE
I confirm to place this declaration on the outside of the shipping box. ☐

I declare that the above information is true and complete to the best of my knowledge and belief.
I understand and agree to the terms and conditions on page 2 of this document.

Name:	Authorized Signature:
Position:	
Date:	

NOTE: If a product is received at Agilent which is contaminated with a toxic or hazardous material that was not disclosed, **the customer will be held responsible** for all costs incurred to ensure the safe handling of the product, and is liable for any harm or injury to Agilent employees as well as to any third party occurring as a result of exposure to toxic or hazardous materials present in the product.

Agilent Vacuum Products Division/Sales and Service Offices

United States
Agilent Technologies
121 Hartwell Avenue
Lexington, MA 02421 - USA
Tel.: +1 781 861 7200
Fax: +1 781 860 5437
Toll-Free: +1 800 882 7426
vpl-customerservice@agilent.com

Benelux
Agilent Technologies Netherlands B.V.
Groenelaan 5, 1186 AA Amstelveen
The Netherlands
Tel: +31 20 547 2000
Fax: +31 20 547 2093

Brazil
Agilent Technologies Brasil
Avenida Marcos Penteado de Ulhoa
Rodrigues, 939 - 6° andar
Castelo Branco Office Park
Torre Jacarandá - Tamboré
Barueri, Sao Paulo CEP: 06460-040
Toll free: 0800 728 1405

China
Agilent Technologies (China) Co. Ltd
No.3, Wang Jing Bei Lu, Chao Yang District
Beijing, 100102, China
Tel: +86 (0)10 64397888
Fax: +86 (0)10 64391318
Toll free: 800 820 3278
vacuum.cnmarketing@agilent.com
vpc-customerservice@agilent.com

France
Agilent Technologies
Parc Technopolis - Z.A. de Courtaboeuf
3, avenue du Canada - CS 90263
91978 Les Ulis cedex, France
Tel: +33 (0) 1 64 53 61 15
Fax: +33 (0) 1 64 53 50 01
vpf.sales@agilent.com

Germany and Austria
Agilent Technologies
Sales & Services GmbH & Co. KG
Lyoner Str. 20
60 528 Frankfurt am Main
GERMANY
Tel: +49 69 6773 43 2230
Fax: +49 69 6773 43 2250

India
Agilent Technologies India Pvt. Ltd.
Unit Nos 105-116
First Floor, Splendor Forum,
Plot No.-3 , District Centre, Jasola
New Delhi-110025
Ph: +91 11 4623 7100
Fax: +91 4623 7105
Toll Free: 18001801517

Italy
Agilent Technologies Italia S.p.A.
Via F.lli Varian, 54
10040 Leini, (Torino) - Italy
Tel: +39 011 9979 111
Fax: +39 011 9979 350
Toll free: 00 800 234 234 00
vpt-customerservice@agilent.com

Japan
Agilent Technologies Japan, Ltd.
8th Floor Sumitomo Shibaura Building
4-16-36 Shibaura Minato-ku
Tokyo 108-0023 - Japan
Tel.: +81 3 5232 1253
Fax: +81 3 5232 1710
Toll-Free: 0120 655 040
vpj-customerservice@agilent.com

Korea
Agilent Technologies Korea, Ltd.
Shinsa 2nd Bldg. 2F, 966-5 Daechi-dong
Kangnam-gu, Seoul
Korea 135-280
Tel: +82 (0)2 2194 9449
Fax: +82 (0)2 3452 3947
Toll free: 080 222 2452
vpk-customerservice@agilent.com

Mexico
Agilent Technologies
Concepcion Beistegui No 109
Col Del Valle
C.P. 03100 – Mexico, D.F.
Tel.: +52 5 523 9465
Fax: +52 5 523 9472

Singapore
Agilent Technologies Singapore Pte. Ltd,
1 Yishun Avenue 7,
Singapore 768923
Tel : (65) 6215 8045
Fax : (65) 6754 0574
Toll free: 1 800 2762622
vps-customerservice@agilent.com

Southeast Asia
Agilent Technologies Sales Sdn Bhd
Unit 201, Level 2 uptown 2,
2 Jalan SS21/37, Damansara Uptown
47400 Petaling Jaya,
Selangor, Malaysia
Tel : +603 7712 6106
Fax: +603 6733 8121
Toll free: 1 800 880 805
vps-customerservice@agilent.com

Taiwan
Agilent Technologies Taiwan Limited
20 Kao-Shuang Road Ping-Chen City
Tao-Yuan Hsien,
32450 Taiwan, R.O.C.
Tel: +886 3 4959004
Toll free: 0800 018 768
vpw-customerservice@agilent.com

UK and Ireland
Agilent Technologies UK, Ltd.
6 Mead Road Oxford Industrial Park
Yarnton, Oxford OX5 1QU – UK
Tel.: +44 (0) 1865 291570
Fax: +44 (0) 1865 291571

Other Countries
Agilent Technologies Italia S.p.A.
Via F.lli Varian, 54
10040 Leini, (Torino) - Italy
Tel.: +39 011 997 9111
Fax: +39 011 997 9350
Toll-Free: 00 800 234 234 00

Customer Support & Service

NORTH AMERICA:
Toll Free: 800 882 7426
vpl-ra@agilent.com
EUROPE:
Toll Free: 00 800 234 234 00
vpt-customercare@agilent.com
PACIFIC RIM:
please visit our website for individual office information
http://www.agilent.com/chem/vacuum

Worldwide Web Site, Catalog and Order On-line:
www.agilent.com/chem/vacuum
Representatives in most countries

12/13

© Agilent Technologies, Inc. 2016

Printed in ITALY
02/2016
Publication Number: 87-900-103-01 (H)

Agilent Technologies